User Manual

For

V70 Series High Performance Vector Control Mini VFD

OYOSTEPPER
www.oyostepper.com

Thank you for choosing V70 series multi-function and high-performance VFD.

Faulty operation of VFD during installation, wiring and operation may cause an accident, please read the Instruction Manual carefully before using so as to master correct using method, thus avoiding personal injury and property loss due to improper operation. After reading, please keep the Instruction Manual well for future maintenance, protection and application in other situations.

For your safety, please ask professional electrical engineering personnel to install and debug the VFD and adjust the parameters.

Signs like DANGER and WARNING in the Manual remind you of precautions when carrying, installing, operating and checking the VFD, please strictly follow the labeled warnings to realize the safety in use.

Refer to the Manual in case of any doubts; for the problems unsolved, please contact the Company directly or our distributors, we will assign professionals to serve you sincerely.

Safety level in the Manual refers to "danger" and "warning" with the signs respectively as below:

DANGER: Casualties may be caused if failing to use as required.

WARNING: Personal injury or damage to the VFD or mechanical system may be caused if failing to use as required.

Make sure the contents with safety signs are observed. For different situations, "Warning" may also cause serious results, so it is necessary to abide by the precautions in Instruction Manual.

DANGER

- Turn the power off before wiring.
- After cutting off AC power, high voltage still exists in the VFD before the charging indicator goes out, so it is dangerous to touch internal circuit and components.
- Don't check the components and signal on circuit board during operation.
- Don't dismantle or change the internal connection, wiring or components of VFD at will.
- Don't control buttons with wet hands to avoid electric shock.
- Earthing terminal of the VFD shall be grounded properly.
- It is prohibited to change and replace the control panel and components at will so as to prevent electric shock, explosion and other dangers.

WARNING

- Since semiconductor parts inside the VFD are easily damaged by high voltage, it is prohibited to perform voltage withstand test to them.
- It is prohibited to connect the output terminal U.V.W of VFD to AC power.
- Don't touch the VFD and brake resistor when the power is turned on or disconnected before long in high temperature, so as to avoid scalding.
- Voltage applied to each terminal only can be that required in the Instruction Manual to prevent bursting, damage and so on.
- Don't touch the main circuit boards CMOS and IC of the VFD since they are easily influenced and damaged by static electricity.
- Only qualified professionals can install, debug and maintain the VFD.
- Scrapped VFD shall be disposed as industrial wastes, and burning is prohibited.
- After long-term storage, the VFD must undergo checking and commissioning before being used.
- The VFD can be easily set for high-speed operation, before the setting, please check whether the characteristics of motor and machine are suitable for such high-speed operation.

TABLE OF CONTENTS

NO.1 SAFETY CAUTIONS..... 1

1.1 UNPACKING INSPECTION..... 1

1.1.1 Inspection after unpacking..... 1

1.1.2 Introduction of V70 series nameplate..... 1

1.1.3 Model specification..... 1

1.2 INSTALLATION..... 1

1.3 USE..... 2

1.3.1 Before energizing..... 2

1.3.2 Energizing..... 2

1.3.3 Running..... 2

1.4 STORAGE..... 2

NO.2 PRODUCT INTRODUCTION..... 4

2.1 SPECIFICATION OF V70 SERIES..... 4

2.2 GENERAL SPECIFICATION OF THE PRODUCT..... 4

NO.3 WIRING..... 7

3.1 ARRANGEMENT OF MAIN CIRCUIT TERMINALS..... 7

3.1.1 Three-phase..... 7

3.1.2 Single-phase..... 7

3.2 ARRANGEMENT OF CONTROL TERMINALS..... 7

3.3 DESCRIPTION OF MAIN CIRCUIT TERMINALS..... 7

3.4 DESCRIPTION OF CONTROL TERMINALS..... 7

3.5 DESCRIPTION OF JUMPER FUNCTION..... 8

3.6 BASIC WIRING DIAGRAM..... 9

3.6.1 Main circuit wiring..... 10

NO.4 KEYBOARD DESCRIPTION..... 12

4.1 DESCRIPTION OF KEYBOARD..... 12

4.2 DESCRIPTION OF INDICATOR FUNCTIONS..... 13

4.3 DESCRIPTION OF DISPLAYED ITEMS.....13

NO.5 FUNCTION LIST.....15

5.1 BASIC FUNCTION PARAMETERS.....15

5.2 APPLICATION FUNCTION PARAMETERS..... 16

5.3 FUNCTIONAL PARAMETERS OF INPUT/OUTPUT TERMINALS..... 17

5.4 FUNCTIONAL PARAMETERS OF ANALOG QUANTITY..... 20

5.5 FUNCTIONAL PARAMETERS OF MULTI-SEGMENT SPEED..... 20

5.6 PROTECTION FUNCTION PARAMETERS.....23

5.7 FUNCTION PARAMETERS OF CONSTANT-PRESSURE WATER SUPPLY..... 24

5.8 MOTOR FUNCTION PARAMETERS..... 24

5.9 PID FUNCTION PARAMETERS..... 25

5.10 COMMUNICATION FUNCTION PARAMETERS..... 26

5.11 MONITORING FUNCTION PARAMETERS..... 26

NO.6 DETAILED FUNCTION DESCRIPTIONS.....28

6.1 BASIC FUNCTION PARAMETERS.....28

EMERGENCY STOP DECELERATION TIME..... 32

6.3 FUNCTIONAL PARAMETER OF INPUT/OUTPUT TERMINALS.....37

6.4 FUNCTIONAL PARAMETER OF ANALOG QUANTITY.....46

6.6 PROTECTION FUNCTION PARAMETERS.....56

6.7 FUNCTION PARAMETERS OF CONSTANT-PRESSURE WATER SUPPLY..... 58

6.8 MOTOR FUNCTION PARAMETERS.....61

6.9 PID FUNCTION PARAMETERS..... 64

6.10 COMMUNICATION FUNCTION PARAMETERS..... 66

6.11 MONITORING FUNCTION PARAMETERS..... 75

NO.7 MAINTENANCE AND FAULT INFORMATION.....78

7.1 MAINTENANCE AND INSPECTION CAUTIONS..... 78

7.2 REGULAR INSPECTION ITEMS..... 78

7.3 FAULT INFORMATION AND FAULT CLEARING..... 78

7.4 FAULT AND ANALYSIS.....80

7.5 COMMON ANOMALIES AND COUNTERMEASURES..... 81

NO.8 SELECTION AND CONFIGURATION OF PERIPHERAL FACILITIES.....83

8.1 OPTIONS..... 83

8.2 CONFIGURATION..... 83

ANNEX.....86

ANNEX I EXAMPLES OF SIMPLE APPLICATION.....86

ANNEX II EXTERNAL AND INSTALLATION DIMENSIONS.....89

No.1 Safety cautions

1.1 Unpacking inspection

V70 series multi-function and high-performance VFD has passed test and quality inspection before delivery. After purchasing it and prior to unpacking, please check whether the package is damaged due to improper transportation, and whether the specification and model are in conformity with the ordered machine, in case of any problem, please contact the supplier.

1.1.1 Inspection after unpacking

(1) There is a VFD, an instruction manual, a warranty card and a certificate of approval inside.

(2) Check the nameplate at side of the VFD to make sure the product in hand is the right one.

1.1.2 Introduction of V70 series nameplate

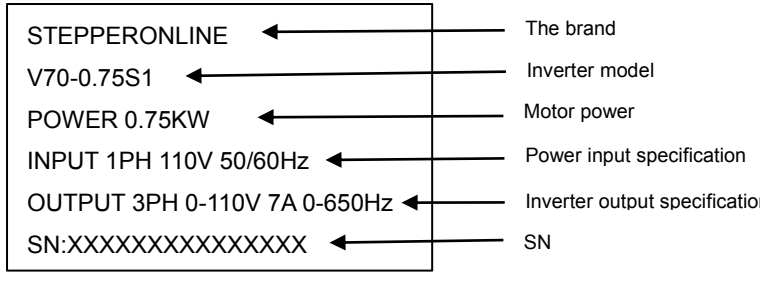

Figure 1-1 Introduction of V70 series nameplate

1.1.3 Model specification

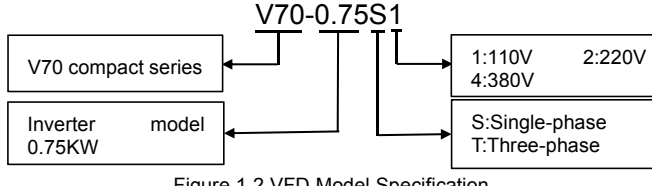

Figure 1-2 VFD Model Specification

1.2 Installation

● Ambient temperature ranges from -5℃ to 40℃, high temperature and moist shall be prevented with the humidity less than 90% (non-condensation).

● Electromagnetic interference shall be prevented and interference source shall be kept away.

● Water drop, steam, dust, cotton dust, and metal powder, as well as oil, salt and corrosive

gas shall be prevented entering.

● It is prohibited to install the VFD in environment with inflammable and explosive gas, as well as liquid and solid.

● It is unallowable to install air switch, contactor, capacitor or piezoresistor concerned and other devices at output side, so as to avoid VFD fault and damage to tripping protection or components.

● The VFD shall adopt independent power supply rather than sharing power supply with electric welder, so as to prevent the damage to VFD protection.

● To facilitate cooling and maintenance, the VFD shall be installed vertically with enough space around to ensure ventilation.

● Installation wall shall be made of non-combustible materials like iron plate which shall be prevented from vibration to cause damage to the VFD.

● If several VFDs are installed up and down in one cabinet, certain spacing shall be kept and baffle plate shall be set there between.

1.3 USE

1.3.1 Before energizing

● Voltage of the power supply selected must have the same specification with the input voltage of VFD.

● PE refers to earthing terminal, please make sure the motor and VFD are grounded properly to ensure safety.

● Do not set contactor between power supply and VFD to control startup or stop of VFD, otherwise life time of the inverted will be impacted.

● Wiring of main circuit terminal shall be correct, L1.L2.L3.L.N refer to power input terminals which are prohibited to be mixed with U.V.W., otherwise, damage to the VFD may be caused during energizing.

1.3.2 Energizing

● It is prohibited to plug and unplug the connector on VFD to prevent surge entering the control panel and causing damage to the VFD.

● It is necessary to put the cover in place to prevent electric shock causing personal injury.

1.3.3 Running

● It is prohibited to enable or disconnect motor unit during the running of VFD, so as to prevent overcurrent tripping even burning the main circuit.

● It is prohibited to remove the front cover of VFD during energizing to prevent electric shock causing personal injury.

● When the failure restart function is started, the motor will restart automatically after the running stops; please keep away from the machine at this time to avoid accident.

● Stop switch will not be enabled until being set, which is different from the emergency switch in use, please pay attention to it.

1.4 Storage

● Temperature of the storage environment shall range from -20℃ to +65℃;

● Relative humidity of the storage environment shall range from 0% to 95% in dry place

without condensation or dust;

● There shall be no corrosive gas and liquid in the storage environment, it shall be put on shelter preferably with proper package;

● Long-term storage of VFD may cause deterioration of electrolytic capacitor, so it is necessary to switch it on over 5h once a year at least, and the voltage must rise to rated voltage value via a voltage regulator when inputting.

No.2 Product Introduction

2.1 Specification of V70 series

Model	Input voltage	Power (KW)	Horsepower (Hp)	Capacity of driver (KVA)	Output current (A)	Applicable motor (KW)
V70-0.75S1	Single-phase 110V	0.75	1	2.0	7	0.75
V70-1.5S1		1.5	2	2.8	14	1.5
V70-2.2S1		2.2	3	4.4	20	2.2
V70-1.5S2	Single-phase 220V	1.5	2	2.8	7	1.5
V70-2.2S2		2.2	3	4.4	11	2.2
V70-3.7S2		3.7	5	6.8	17	3.7
V70-1.5T4	Three-phase 380V	1.5	2	3.2	4	1.5
V70-2.2T4		2.2	3	4.0	5	2.2
V70-3.7T4		3.7	5	6.8	8.5	3.7
V70-7.5T4		7.5	10	14	17.5	7.5

2.2 General specification of the product

Name		V70 series
Control mode		V/F ， Vector control
Input power		380V power: 380±15% 220V power: 220±15% 110V power: 110±15%
Four digital display & status indicator		Display frequency, current, rotating speed, voltage, counter, temperature, forward/reverse status, fault, etc.
Communication control		RS-485
Operating temperature		-10 ~ 40℃
Humidity		Relative humidity ranging from 0 to 95% (without condensation)
Vibration		Below 0.5G
Frequency control	Range	0.1 ~ 1000.0Hz
	Accuracy	Digital type: 0.01% (-10 ~ 40℃); analog type: 0.1% (25±10℃)
	Setting resolution	Digital type: 0.01Hz; analog type: 1% of the maximum operating frequency

	Output resolution	0.01Hz
	Keyboard setting mode	Set as ← ▲ ▼ directly
	Analog setting mode	External voltage 0 ~ 5V, 0 ~ 10V, 4 ~ 20mA, 0 ~ 20mA.
	Other functions	Three hopping frequencies (lower-frequency limit, startup frequency and stop frequency) can be set respectively
General control	Acceleration/deceleration control	4 optional acceleration/deceleration time (0.1 ~ 6500 seconds)
	Motor control mode	V/F、vector control
	Torque control	Torque can be set rising with the maximum of 10.0%, and it can reach 150% when starting at 1.0Hz
	Multi-function input terminal	6-way programmable input; realize the functions like 8-segment speed control, program running, 4-segment acceleration/deceleration switching, UP, DOWN function, counter, external emergency stop, etc.
	Multi-function output terminal	1-way programmable output; realize running, zero speed, counter, external exception, program running and other indications as well as alarm.
	Other functions	Automatic voltage regulation (AVR), deceleration stop or free stop, DC brake, automatic reset and restart, frequency tracking, PLC program control, transverse control, draft control, automatic energy-saving running, carrier regulation (up to 20KHz), etc.
Protection Function	Overload protection	Electric relay protection motor driver (constant torque: 150% per minute, fans: 120% per minute).
	FUSE protection	In case of fuse, the motor stops running
	Over voltage	110V: DC voltage>200V 220V: DC voltage>390V 380V: DC voltage>800V
	Low voltage	110V: DC voltage<100V 220V: DC voltage<200V 380V: DC voltage<400V
	Restart after transient stop	Restart after transient stop through frequency tracking mode

	Stall prevention	Stall prevention during acceleration/deceleration
	Short circuit of output terminal	Electronic circuit protection
	Other functions	Overheating protection of radiating fin, reverse limit, direct startup after operating, fault reset, parameter locking, etc.

No.3 Wiring

3.1 Arrangement of main circuit terminals

3.1.1 Three-phase

L1	L2	L3	DC+	DB	U	V	W

3.1.2 Single-phase

L	N		DC+	DB	U	V	W

[Note] Screws on main control board serve as PE terminals for that of 0.4 ~ 1.5kW.

3.2 Arrangement of control terminals

FC	FB	FA

485 +	485 -	AO	GND	X4	X5	X6/ Y1_FO

P12	AI1	AI2	GND	X1	X2	X3

3.3 Description of main circuit terminals

Symbol of terminal	Name of terminal	Description
L1. L2. L3	Input power terminal	Connected to three-phase 380V power
L. N		Connected to single-phase 220/110V power
U. V. W	VFD output terminal	Connected to three-phase motor.
DC+	DC output + terminal	DC bus output terminal is used for connecting external brake unit or common DC bus system. (DC- is not provided for partial models)
DC-	DC output - terminal	
DB	Brake output terminal	Connecting brake resistor between DB and DC+.
PE	Earthing terminal	VFD housing earthing terminal must be earthed.

3.4 Description of control terminals

Symbol of terminal	Name of terminal	Description
X1	Multi-function digital input terminals 1 ~ 6	Factory setting is forward
X2		Factory setting is reverse

X3		Factory setting is reset
X4		Factory setting is high speed
X5		Factory setting is medium speed
X6/Y1_FO		Factory setting is low speed
GND	Digital/analog/communication and power earthing terminals	Isolation of GND inside from PE
P12	+12V power supply	Maximum output current: 150mA
AI1	Analog voltage input	Input voltage range: 0 ~ +10V
AI2	Analog current/voltage input, selecting via jumper J3, default to current input	Input current range: 0 ~ +20mA Input voltage range: 0 ~ +10V
AO	Analog voltage output, can choose voltage or current	Output voltage range: 0 ~ +10V Input current range: 0/4 ~ +20mA
FA、FB、FC	Multi-function relay output	FA-FC: normally open, FB-FC: normally close Contact specification: 250VAC/3A, 30VDC/3A
485+ ，485-	RS485 communication interface	Available connection of 1 ~ 32 RS485 sites

3.5 Description of jumper function

No.	Function	Ex-factory setting
J1	Selection of X1-X6 wiring mode: NPN PNP	PNP
J2	Selection of AO output: VO，voltage AO，current	VO
J3	Selection of AI2 input: V，voltage A，current	A
J4	RS485communication interface terminator enabled: ON OFF	OFF
J5	Selection of X6 terminal function reuse: X6 Y1_PFO	X6

Wiring mode of multi-function digital input terminals X1-X6:

(1) When NPN type wiring mode is adopted for external equipment, leakage type logic is induced and the current flows out from input terminal (sourcing current) as shown in Figure 3-1, at the same time parameter F067=0 is required.

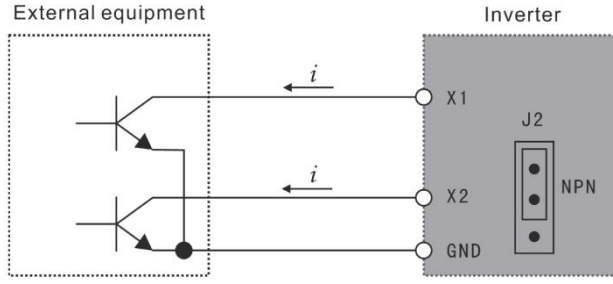

Figure 3-1 NPN Type Wiring Mode

(2) When PNP type wiring mode is adopted for external equipment, source-type logic is induced, and the current flows into from input terminal (sinking current) as shown in Figure 3-2, at the same time parameter F067=1 is required.

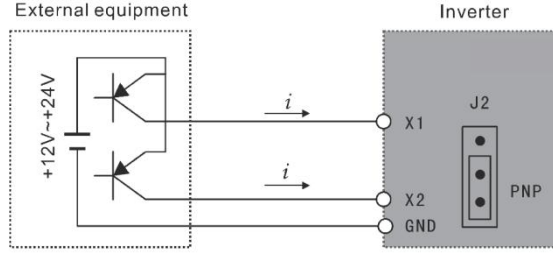

Figure 3-2 PNP Type Wiring Mode

3.6 Basic wiring diagram

VFD wiring involves main circuit and control circuit. The user can raise the cover of housing, at this time main circuit terminal and control circuit terminal shall be viewed, and the user must conduct correct connection as per wiring circuit below.

Figure 3-3 below refers to standard wiring diagram of V70 series.

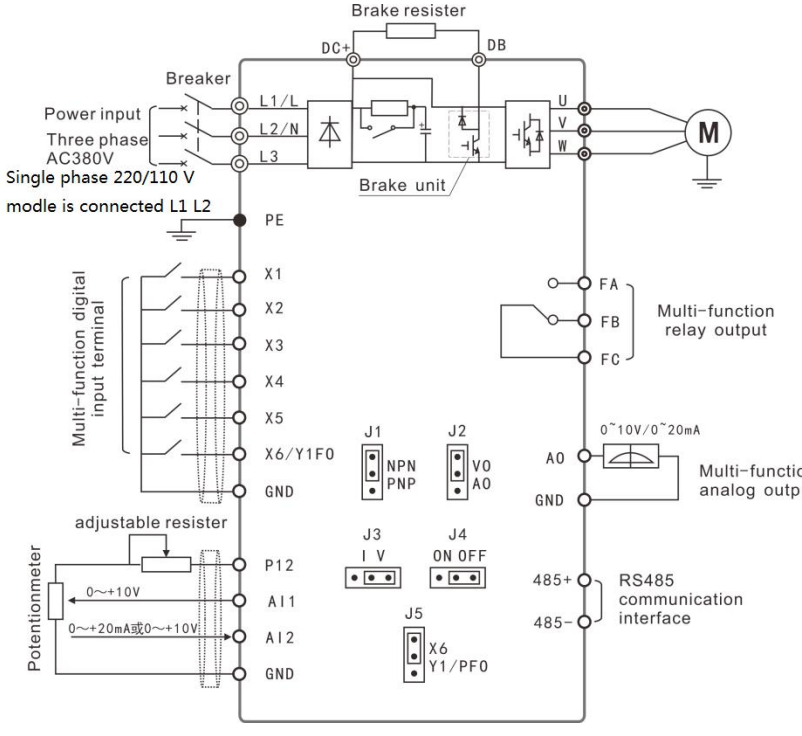

Figure 3-3 Standard Wiring of V70 series VFD

3.6.1 Main circuit wiring

● During wiring, please select wire diameter specification and conduct wiring as per those specified by electrical engineering laws so as to ensure the safety.

● For power supply wiring, prefer shielded wire or spool, and earth isolating layer or both ends of spool.

● Be sure to install air circuit breaker NFB between the power and input terminal (L1.L2.L3.L.N).

(In case of applying leakage switch, please use the breaker with high frequency solution)

● Do not connect AC power to VFD output terminal (U.V.W).

● Prevent output wire touching metallic part of VFD housing; otherwise, earth short-circuit may be induced.

● Do not apply phase-shifting capacitor, LC, RC noise filter or other elements to output end of VFD.

● Indispensably make main circuit wiring of VFD away from other control equipment.

● When the wire between VFD and motor exceeds 15m (220V grade) or 30m (380V grade), extremely high dV/dT shall emerge inside motor coil and it shall produce damage to layer insulation of the motor, so it is necessary to use AC motor dedicated to VFD or install reactor onto VFD side.

● In case of long distance between VFD and motor, reduce carrier frequency, for the larger the carrier frequency is, the larger the higher harmonic leakage current becomes, which shall produce adverse effect on the VFD and other equipment.

1.Control circuit wiring

- It is not allowed to place signal wire and main circuit wire inside the same slot.
- Supply cord of signal wire should be shielded wire with the size of 0.5-2.0mm.
- Control terminal on control board should be correctly used as required.

2.Earth wire

- Please properly earth terminal PE of earth wire.
  220V grade: The third type earthing (earthing resistance is below 100)
  380V grade: Particularly the third type earthing (earthing resistance is below 10)
- Use earth wire as per fundamental length and size specified by electrical equipment technology.
- Absolutely avoid sharing earth electrode with welding machine, power generating machine and other large-scale power equipment and make earth wire away from power line of large-scale equipment as much as possible.
- Earth wire must be short to the utmost extent.

No.4 Keyboard Description

4.1 Description of keyboard

Figure 4-1 V70 Series keyboard

Description of key function:

Key graphics	Key name	Function description
SET	SET	Enter into menu、enter into parameter or parameter data writing confirm
ESC	ESC	Return to the status of “ENTER”
^	UP	parameters of function code、data etc increase/decrease, revise and select all kinds of modes

⑦ ∨	DOWN	
① «	SHIFT	Status monitor mode switch，parameter of third stage menu switch
② F/R	DIR	Change the running direction of motor
⑥ RUN	RUN	Run command
⑥ STOP	STOP	Stop command/abnormal reset command

4.2 Description of indicator functions

Indicator	Function description
F/R	Off: reverse on: reverse
RUN	Off: motor is stopped on: motor is running
A	Unit of current
V	Unit of voltage
Hz	Unit of frequency
A + Hz combination	Time(S)
V + Hz combination	Percentage(%)

4.3 Description of displayed items

Displayed content	Description
r 50.0	Output frequency is 50.0Hz at this time
F 50.0	Set frequency is 50.0Hz
A 03.0	Output current is 3.0A at this time
1440	Output speed is 1440r/min and speed light turns on at this time
u 510	DC voltage is 510V at this time

u 380	AC voltage is 380V at this time
t 35.0	VFD temperature is 35.0℃ at this time
0 105	Counter value is 105 at this time
r 50.0	PID target value is 50.0%
n 48.0	PID feedback value is 48.0%

No.5 Function List

Description of special symbols:

* indicates that this parameter content has various set values or it shall be specifically set based on actual situation.

Ex-factory value refers to parameter value set during delivery of VFD or parameter value refreshed while the user restores ex-factory operation.

Alteration refers to alternative attribute of the parameter. ○ indicates that the alteration is available during shutdown and operating, × indicates that the alteration is unavailable during operating, and Δ refers to read-only parameter which cannot be altered by the user.

5.1 Basic function parameters

Function code	Name of function	Setting range and data content	Ex-factory value	Alteration
F000	Parameter locking	0: Invalid 1: Valid	0	×
F001	Control mode	0: keyboard 1: External terminal 2: Communication port	0	×
F002	Frequency setting selection	0: keyboard 1: AI1 2: Communication port 3: Operate potentiometer 4: AI2 5: PFI 6: AI1+AI2	3	×
F003	Main frequency	0.0～1000.0 Hz	*	○
F004	Reference frequency	0.1～1000.0 Hz	50.0	×
F005	Maximum operating frequency	10.0～1000.0 Hz	50.0	×
F006	Intermediate frequency	0.1～1000.0 Hz	5.0	×
F007	Minimum frequency	0.1～20.0 Hz	0.50	×
F008	Maximum voltage	0.1V～*	220/380	×
F009	Intermediate voltage	0.1V～*	*	×
F010	Low-frequency torque boost voltage	0.1V～50.0V	*	×
F011	Lower frequency limit	0.0～1000.0 Hz	0	○
F012	Drive control mode	0: VF 1: vector control	1	×
F013	Parameter resetting	8 restore ex-factory value	00	×

F014	Acceleration time I	0.1～650.00s	*	○
F015	Deceleration time I	0.1～650.00s	*	○
F016	Acceleration time II	0.1～650.00s	*	○
F017	Deceleration time II	0.1～650.00s	*	○
F018	Acceleration time III	0.1～650.00s	*	○
F019	Deceleration time III	0.1～650.00s	*	○
F020	Acceleration time IV (jogging acceleration time)	0.1～650.00s	*	○
F021	Deceleration time IV (jogging acceleration time)	0.1～650.00s	*	○
F022	Emergency stop deceleration time	0.1～650.00s 0.00 emergency stop by costing to stop	0.0	○

5.2 Application function parameters

Function code	Name of function	Setting range and data content	Ex-factory value	Alteration
F023	Reverse prohibit	0: Reverse prohibit 1: Reverse allow	1	×
F024	Stop key is valid or not	0: STOP invalid 1: STOP valid	1	×
F025	Start mode	0: Start from starting frequency 1: Frequency tracking start	0	×
F026	Reverse prohibit	0: Reverse prohibit 1: Reverse allow	0	×
F027	Starting frequency	0.1～30.0 Hz	0.5	×
F028	Stop frequency	0.1～30.0 Hz	0.5	×
F029	Start braking time	0.0～25.0s	0.0	×
F030	Stop braking time	0.0～25.0s	0.0	×
F031	DC braking level	0.0～20.0%	2.0	×
F032	Frequency tracking time	0.1～20.0s	5.0	×
F033	Current tracking frequency level	0～200%	150	×
F034	Voltage rise time during frequency tracking	0.1～10.0s	0.5	○

F035	Percentage of start voltage during frequency tracking	1～20%	5	×
F036	Voltage increment during frequency tracking	1～20V	10	×
F037-F038		Reserve		
F039	Starting frequency of DC BRAKING	0～15	0	×
F040	Frequency resolution	0.0～1000.0 Hz	*	○
F041	Carrier frequency	0～15	*	×
F042	Jogging frequency	0.0～1000.0 Hz	5.0	○
F043	S curve time	0.0～6500.0s	0.0	○

5.3 Functional parameters of input/output terminals

Function code	Function name	Setting range and data content	Ex-factory value	Alteration
F044	FOR(X1) function	0: Invalid 1: Run 2: Forward 3: Reverse 4: Stop 5: Forward/reverse 6: Inching 7: Inching forward 8: Inching reverse 9: External control timer I 10: External control timer II 11: Setting frequency is forced to F003 12: Radiator or motor overheating 13: Emergency stop 14: Reset 15-16: Reserve 17: Acceleration/deceleration time selection I 18: Acceleration/deceleration time selection II 19: Multi-segment speed I	02	×
F045	REV(X2) function		03	×
F046	RST(X3) function		14	×
F047	SPH(X4) function		22	×
F048	SPM(X5) function		23	×
F049	SPL(X6) function		24	×

		20: Multi-segment speed II 21: Multi-segment speed III 22: High speed 23: Medium speed 24: Low speed 25: PID allowed 26: Multi-segment speed IV 27: UP 28: DOWN 29: Draft allowed 30: Reserve 31: Pulse counter 32: Pulse counter resets		
F050	Y1 output function	0: Invalid 1: Indication during running 2: Zero-speed indication 3: Fault indication 4: DC braking indication 5: Setting frequency arrival indication 6: Accelerating indication 7: Decelerating indication 8: Frequency consistency arrival I indication 9: Frequency consistency arrival II indication 10: Motor overload indication 11: Over-torque indication 12: VFD overload indication 13: Pulse setting counter arrival indication 14: Pulse middle counter arrival indication 15: External control timer I arrival indication 16: External control timer II arrival indication 17: Low-voltage indication 18: Internal control multi-segment speed stage completion indication 19: Internal control multi-segment speed 20: 4～20mA off line indication	01	○
F051	Y2 output function		05	○
F052	Output function (KA & KC are terminals)		00	○
F053	Output function (FA, FB & FC terminals)		03	○

		21～23: reserve 24: ED0 25: auxiliary pump 1 motion indication 26: auxiliary pump 2 motion indication 27: draft finishing indication 28: PID lower limit alarm indication 29: PID up limit alarm indication 30: braking resistance motion indication 31: electromagnetism relay motion indication 32: fan motion indication		
F054	AO output function	0: output frequency 1: output current 2: DC bus voltage 3: output voltage	0	○
F055	AO analog output gain	0～400%	100	○
F056	Hopping frequency 1	0.0 ~ 1000.0Hz	0.00	○
F057	Hopping frequency 2	0.0 ~ 1000.0Hz	0.00	○
F058	Hopping frequency 3	0.0 ~ 1000.0Hz	0.00	○
F059	Range of hopping frequency	0.1 ~ 10.0 Hz	0.50	○
F060	Frequency consistency I（constant pressure water supply high speed frequency）	0.0～1000.0 Hz	0.00	○
F061	Frequency consistency II（constant pressure water supply low speed frequency）	0.0～1000.0 Hz	0.00	○
F062	Frequency Consistency range setting	0.1～10.0 Hz	0.50	○
F063	Timer I	0.1 ~ 10.0s	0.1	×

F064	Timer II	1～ 100s	1	×
F065	Count value	0～65500	0	○
F066	Value of middle counter	0～65500	0	○
F067	Digital input terminal Positive & negative logic	0: Positive logic, wiring mode NPN 1: Negative logic, wiring mode PNP	01	×
F068	Digital input terminal dithering elimination time	0～60000ms	20	○
F069	PFO maximum frequency	1.0～10.0	10.0	×

5.4 Functional parameters of analog quantity

Function code	Function name	Setting range and data content	Ex-factory value	Alteration
F070	Input channel selection for analog quantity	unit's digit: 0: 0～10V 1: 0～5V Ten's digit: 0: 0～20mA/0～10V 1: 4～20mA/2～10V	00	×
F071	Filtering time of analog quantity	0～1000ms	20	×
F072	High-end frequency of analog frequency	0.0～1000.0 Hz	50.00	×
F073	Low-end frequency of analog quantity	0.0～1000.0 Hz	0	×
F074	Bias direction of high-end frequency	0: Positive 1: Negative	0	×
F075	Bias direction of low-end frequency	0: Positive 1: Negative	0	×
F076	Selectable negative bias reverse of analog quantity	0: Irreversible 1: Reversible	0	×
F077	UP.DOWN memory function selection	0: Not memorized 1: Memorized	0	×
F078	UP.DOWN increment selection	0: 0.1Hz 1: 1.0Hz	1	×
F079	UP.DOWN increment multiple	1～250	1	×

5.5 Functional parameters of multi-segment speed

Function code	Function description	Setting range and data content	Ex-factory value	Alteration
F080	Selection of multi-segment speed mode	0:Normal operation 1:Internally controlled 16-segment speed 2:Externally controlled 4-segment speed 3:Externally controlled 16-segment speed 4:Externally controlled 4-segment speed(command valid automatically) 5: Externally controlled 6-segment speed(command	2	×
F081	Internally controlled multi-segment speed Selection of operation mode	0: Stop after operating for one cycle 1: Circulating operation 2: Stop after automatically operating for one cycle (STOP interval)	0	×
F082	Speed operation directions of first internally controlled 8 segments	0～255（0: forward 1: reverse）	0	×
F083	Speed operation directions of last internally controlled 8 segments	0～255（0: forward 1: reverse）	0	×
F084	Acceleration/deceleration time of the first internally controlled 8 segments	0～65535	0	×
F085	Acceleration/deceleration time of the last internally controlled 8 segments	0～65535	0	×

F086		0.0～1000.0 Hz	15.00	
F087	Frequency II setting	0.0～1000.0 Hz	20.00	
F088	Frequency III setting	0.0～1000.0 Hz	25.00	
F089	Frequency IV setting	0.0～1000.0 Hz	30.00	
F090	Frequency V setting	0.0～1000.0 Hz	35.00	
F091	Frequency VI setting	0.0～1000.0 Hz	40.00	
F092	Frequency VII setting	0.0～1000.0 Hz	0.50	
F093	Frequency VIII setting	0.0～1000.0 Hz	10.00	○
F094	Frequency IX setting	0.0～1000.0 Hz	15.00	
F095	Frequency X setting	0.0～1000.0 Hz	20.00	
F096	Frequency XI setting	0.0～1000.0 Hz	25.00	
F097	Frequency XII setting	0.0～1000.0 Hz	30.00	
F098	Frequency XIII setting	0.0～1000.0 Hz	35.00	
F099	Frequency XIV setting	0.0～1000.0 Hz	40.00	
F100	Frequency XV setting	0.0～1000.0 Hz	45.00	
	Frequency XVI setting			
	Internally controlled multi-segment speed timer I			
F101	Internally controlled multi-segment speed timer II	0.0～6500.0s	10.0	
F102	Internally controlled multi-segment speed timer III	0.0～6500.0s	10.0	
F103	Internally controlled multi-segment speed timer IV	0.0～6500.0s	0.0	
F104	Internally controlled multi-segment speed timer V	0.0～6500.0s	0.0	
F105	Internally controlled multi-segment speed timer VI	0.0～6500.0s	0.0	
F106	Internally controlled multi-segment speed timer VII	0.0～6500.0s	0.0	
F107	Internally controlled multi-segment speed timer VIII	0.0～6500.0s	0.0	
F108	Internally controlled multi-segment speed timer IX	0.0～6500.0s	0.0	
F109	Internally controlled multi-segment speed timer X	0.0～6500.0s	0.0	○
F110	Internally controlled multi-segment speed timer XI	0.0～6500.0s	0.0	
F111	Internally controlled	0.0～6500.0s	0.0	
F112		0.0～6500.0s	0.0	
F113		0.0～6500.0s	0.0	
F114		0.0～6500.0s	0.0	
F115		0.0～6500.0s	0.0	
F116		0.0～6500.0s	0.0	

	multi-segment speed timer XII Internally controlled multi-segment speed timer XIII Internally controlled multi-segment speed timer XIV Internally controlled multi-segment speed timer XV Internally controlled multi-segment speed timer XVI			
F117	Internally controlled multi-segment speed memory function(UP.DOWN power fault reserve)	0～1	0	×

5.6 Protection function parameters

Function code	Function	Setting range & function description	Ex-factory value	Alteration
F118	Selection of over-voltage stall	0～1	1	×
F119	Stalling level during accelerating	0～200%	150	×
F120	Stalling level during constant speed	0～200%	150	×
F121	Stalling deceleration time during constant speed	0.1～25.5s	5	○
F122	Prevent of over-voltage stalling level	200～800V	Motor type	×
F123	Selection of over-torque detection mode	0～3	0	×
F124	Selection of over-torque detection mode	0～200%	0	×
F125	Over-torque detection level	0.1～20.0s	1.0	×

F126	Over-torque detection time	0～1	0	×
F127	Pulse counter memory	0～65000	0	×
F128	Cooling fan control	0: running always 1: control by running command, delayed 30S after turning off	0	×
F129	Dynamic braking voltage	0～800V	Motor type	×

5.7 Function parameters of constant-pressure water supply

Function node	Function description	Setting range & function description	Ex-factory value	Alteration
F130	Quantity of auxiliary	0～2	0	×
F131	Continuous time of auxiliary pump	1～9000min	60	×
F132	Interlocking time of auxiliary pump	1～250s	5	○
F133	High-speed operating time	1～250s	60	○
F134	Low-speed operating time	1～250s	60	○
F135	Stop pressure level	1～150%	95	○
F136	Stop level continuous time	1～250s	30	○
F137	Wake-up level	1～150%	80	○
F138	Sleep frequency	0.0～1000.0Hz	20.00	○
F139	Continuous time of sleep frequency	1～250s	20	○

5.8 Motor function parameters

Function code	Function description	Setting range & function description	Ex-factory value	Alteration
F140	Rated power of motor	Set as per motor nameplate	*	×
F141	Rated voltage of motor	Set as per motor nameplate	*	×
F142	Rated current of motor	Set as per motor nameplate	*	×
F143	Number of motor poles	02～22	04	×
F144	Rated rotating speed of motor	00～9999	1440	×

F145	Automatic torque compensation	0.0～10.0%	2.0	×
F146	Motor no-load current	0～100%	40	×
F147	Motor slip compensation	0～1.0	0.000	×
F148	Motor slip compensation maximum frequency	0.0～20.0Hz	2.0	×
F149	Motorslip compensation filtering time	0～200ms	10	○
F150	AVR function	0 ~ 1	1	×
F151	Automatic energy-saving function	0.0～20.0%	0.0	×
F152	Fault restart time	0.2～25.0s	1.0	○
F153 F154 F155	Selection of transient stop restart Allowed power fault time Times of fault restart	0: Invalid 1: Frequency tracking 0.1～5.0s 0 ~ 10	0 0.5 00	×

5.9 PID function parameters

Function code	Function name	Setting range & content description	Ex-factor y value	Alteration
F156	Proportional constant P	0.0～1000.0%	100.0	○
F157	Integration time I	0.1～3600.0s 0 close integration	2.0	○
F158	Derivation time D	0.01～10.00s，0 close derivation	0	○
F159	target value	0.0～100.0%	0	○
F160	PID channel setting	Unit's digit: PID setting channel 0:set by F159 1: AI1 2: AI2 Ten's digit: PIDfeedback channel 0:AI1 1: AI2	10	×
F161	PID up limit	0～100%	100	○
F162	PID lower limit	0～100%	0	○

5.10 Communication function parameters

Function code	Function name	Setting range and content description	Ex-factory value	Alteration
F163 F164 F165	Communication address Communication transmission speed Communication data mode	0～250 0～3 0～5	1 2 3	×
F166～F168		reserve		
F169	Selection of communication protocol	0: Standard Modbus Agreement	0	×

5.11 Monitoring function parameters

Function code	Function	Setting range and content description	Ex-factory value	Alteration
F170	Selection of extension display 1	0～11 0: not displayed 1: PID feedback value 2: operation speed 3: PID target value 4: bus voltage 5: heat sink temperature 6: counter 7: output torque 8: input terminal status 9: AI1 10: AI2 11: PFI	4	○
F171	Selection of extension display 2		5	
F172 F173 F174 F175 F176	Fault clearing Rated voltage of VFD Rated current of VFD Type of VFD Frequency standard of VFD	00-10（01 refers to fault clearing) Set as per machine model Set as per machine model 0: Constant torque 1: Fan model 0: 50Hz 1: 60Hz	* * * 0 0	△
F177 F178 F179 F180	Unexpected error 1 Unexpected error 2 Unexpected error 3 Unexpected error 4	Note: ——means no fault record	—— —— —— ——	△

F181	Software version No.	00～02	00	○
F182	Running time	0～3600s		△
F183	Cumulative running time	0～65535h		△
F184	RPM display factor	0.000～9.999	1.000	○
F185	Selection of starting pre-set display	0～5 0: output frequency 1: setting frequency 2: output current 3: output voltage 4: setting by F170 5: setting by F171	0	○
F186～F250		reserve		

No.6 Detailed Function Descriptions

6.1 Basic function parameters

F000	Setting range	Unit	Ex-factory value	Change
Parameter locking	0-1	1	0	×

0: Invalid
1: Valid (parameter locking, meaning other parameters are unchangeable except this parameter.)
This parameter can avoid mistake operation of non-operators which may cause unnecessary danger and mistake. But after locking parameters, the current frequency can be changed through keys ▲ and ▼.

F001	Setting range	Unit	Ex-factory value	Alteration
Selection of control mode	0-2	1	0	×

0: Keyboard setting (Operating command is set by keyboard.)
1: External terminals setting (Operating command is set by 6-way programmable input terminals.)
2: Communication interface setting (Operating command is set by transmission of communication interface)

F002	Setting range	Unit	Ex-factory value	Alteration
Frequency setting selection	0-3	1	0	×

0: Keyboard setting (F003 of former operating frequency is set by keyboard.)
1: Analog quantity setting (Former operating frequency is controlled by input analog signals and signal type is decided by F070. Refer to F070-F076 for relevant parameters.)
2: Communication interface setting (Current operating frequency is set by serial port communication.)
3: Potentiometer of keyboard (Current operating frequency is set by potentiometer knob on keyboard.
5: Inpulse input setting
6: Analog quantity AI1+AI2 setting

F003	Setting range	Unit	Ex-factor	Alteration
Main frequency	0.0～1000.0 Hz	0.01 Hz	*	○

In case that frequency option is set by keyboard, the frequency operates with set value of F003.During operating, the current operating frequency can be changed with keys ▲ and ▼.In multi-segment operation, main frequency is taken as frequency I. If F002 is set as 1, i.e. the external analog quantity is set, the frequency I is set by analog quantity of external terminals. Main frequency setting is limited by maximum operating frequency.
Relevant parameters: F002 and F080. These parameters are adjustable during operating.

F004	Setting range	Unit	Ex-factory	Alteratio
Reference frequency	0.1～1000.0Hz	0.01 Hz	50.00	×

This setting must be conducted as per the motor's rated running voltage frequency on motor nameplate. Generally, the frequency setting value shall not be changed at will. In case of being equipped with special motor, please set properly as per the motor parameter characteristics, otherwise, the equipment will be damaged.

F005	Setting range	Unit	Ex-factory	Alteration
Maximum operating frequency	10.0～1000.0 Hz	0.01 Hz	50.00	×

This parameter decides the maximum operating frequency of the VFD.

F006	Setting range	Unit	Ex-facto	Alteratio
Intermediate frequency	0.1～1000.0 Hz	0.01 Hz	5.0	×

This parameter can set the intermediate frequency value in any V/F curve. Improper setting will cause insufficient start up torque of VFD or motor over current and even tripping of VFD. The setting value of intermediate frequency is limited by that of reference frequency.

F007	Setting range	Unit	Ex-factor	Alteration
Minimum frequency	0.1～200.0 Hz	0.1 Hz	0.5	×

This parameter decides the minimum startup frequency value in V/F curve.

F008	Setting range	Unit	Ex-factory	Alteration
Maximum voltage	0.1-*	0.1V	220/380	×

This value shall be set as per rated value on motor's nameplate. The ex-factory value of 380V grade is 380V while that of 220V grade is 220V and 110V grade is 110V. This parameter setting range is limited by voltage grade of VFD. And at the sites where motor is relatively far away from VFD, this value can be appropriately increased.

F009	Setting range	Unit	Ex-factor	Alteration
Intermediate voltage	0.1～510.0V	0.1V	*	×

This parameter can set intermediate voltage values in any V/F curve. Improper setting may cause motor over current or insufficient torque and even VFD tripping. Augmenting intermediate voltage may augment the output torque and the output current will increase at the same time. When modifying this parameter, please monitor the output current so as to avoid over current and tripping of VFD.

Intermediate voltage setting value is limited by maximum voltage setting value. When intermediate voltage increases to a certain value, the torque compensation may lose its

utility. When adjusting this parameter, slowly increase the output current of VFD from small to large as per the mechanical load until it meets the startup requirements and do not improve the current with large amplitude, otherwise VFD tripping or equipment damage may occur.

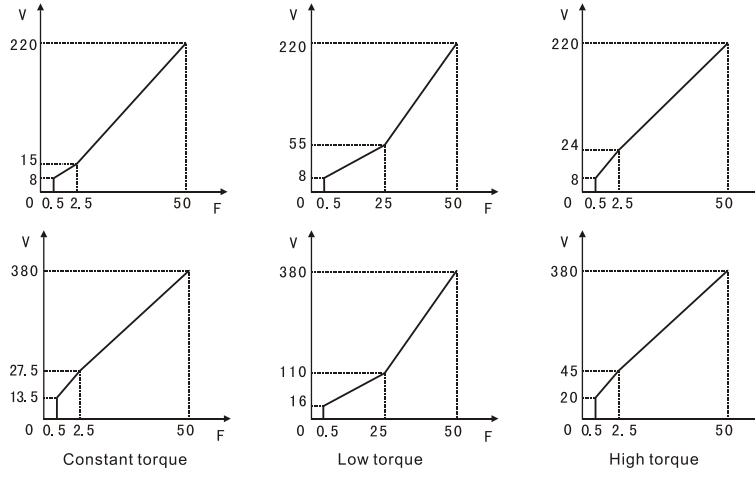

Figure 6-1 Common Curves and Setting Values

F010	Setting value	Unit	Ex-factor	Alteration
Booster voltage of low-frequency torque	0.1～380.0V	0.1V	*	×

This parameter sets the lowest startup voltage value in V/F curve. F010 setting value is limited by voltage of maximum operating frequency. This parameter can compensate the insufficient torque at low frequency, but the torque compensation shall not be too large and shall be set from small to large slowly according to actual situations. Insufficient compensation may cause insufficient torque when motor is at low frequency, while excessive compensation may cause excessive torque and generate impact to machinery and even may cause VFD tripping if severe. V/F curves are determined by F006-F010. This manual supplies several common V/F curves for reference, such as Figure 6-1. Specific curves shall be set as per mechanical load characteristics.

F011	Setting range	Unit	Ex-factory	Alteration
Lower limit of frequency	0.0～1000.0	0.01 Hz	0.00	○

The purpose of lower limit of frequency is to prevent misoperation of site personnel and avoid overheat or other mechanical fault due to too low running frequency of motor. The

setting of lower limit of frequency must be smaller than the setting value of upper limit of frequency.

F012	
Drive control mode	0: VF 1: vector control

F013	Setting range	Unit	Ex-factor	Alteration
Parameter reset	00～10	1	00	×

If the setting of parameter values is improper or abnormal, set them as 08 and reset it after the ex-factory value is recovered. After being locked (when F000=1), the parameters can not be reset unless they are unlocked. Relevant parameter: F000.

F014	Setting range	Unit	Ex-factory value	Alteration
Acceleration time I	0.1～6500.0s	0.1s	*	○
F015				
Deceleration time I				
F016				
Acceleration time II				
F017				
Deceleration time II				
F018				
Acceleration time III				
F019				
Deceleration time III				
F020				
Acceleration time IV (Jogging acceleration time)				
F021				
Deceleration time IV (Jogging deceleration time)				

Acceleration time refers to the time required by the VFD to accelerate from 0Hz to maximum operating frequency. Refer to t1 in Figure 6-2 for details; deceleration time refers to the time required by the VFD to decelerate from maximum operating frequency to 0Hz. Refer to t2 in

Figure 6-2 for details.

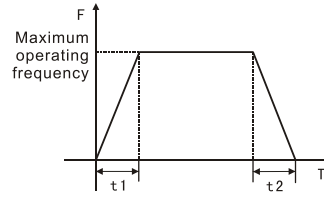

Figure 6-2 Acceleration/deceleration Time Curves

V70 series of VFDs define four kinds of acceleration/deceleration time in all from acceleration/deceleration I to IV. Users can select different acceleration/deceleration time through the corresponding function switching of acceleration/deceleration time at external switch terminals as required; and select different acceleration/deceleration time through relevant parameters of internally controlled multi-segment speed during internally controlled multi-segment speed operation.

Generally, the VFD defaults acceleration/deceleration time I. The ex-factory value of acceleration/deceleration time I is set as per model and acceleration/deceleration time IV refers to jog acceleration/deceleration time.

Relevant parameters: F044-F049，F084，F085 .

F022	Setting range	Unit	Ex-factory value	Alteration
Emergency stop deceleration time	0.1～6500.0s 0.0 refer to emergency stop set by coasting to stop	0.1s	0.0	○

VFD deceleration stop is set by emergency stop deceleration time during emergency stop,if emergency stop deceleration time is 0.0, it means emergency stop is set by coasting to stop. Emergency stop command can be get from digital input terminal 13 function(emergency stop).

6.2 Application function parameters

F023	Setting range	Unit	Ex-factory value	Alteration
Reverse prohibit	0～1	1	1	×

0: Reverse prohibit 1: Reverse valid

This parameter setting is applied to sites where motor is irreversible so as to avoid misoperation of operators. When reverse is prohibited, motor can only rotate in a forward way rather than in a reverse way.

F024	Setting range	Unit	Ex-factory value	Alteration
Stop key is valid or not	0～1	1	1	×

0: STOP key is invalid 1: STOP key is valid

When control mode refers to external terminal control or communication control, the stop key on the panel can select whether to be valid. If selecting valid, the panel will stop the VFD. If it is necessary to restart, remove the running signal firstly and then restart the VFD

This parameter is only valid when F001 is set as 1 or 2.

F025	Setting range	Unit	Ex-factory value	Alteration
Start up mode	0～1	1	0	×

Two kinds of start up modes can be set as required by different equipment.

0: Start from start up frequency. When F029 is set as zero, the DC braking at the time of start up is invalid and the start up shall be conducted from start-up frequency. When F029 is not zero, the DC braking at the time of start up is valid; when starting, firstly start the DC braking and then start from start-up frequency（F027）.

1: Frequency tracking startup: this parameter can be used to restart of high-inertia load. When restarting, the frequency set by VFD will make frequency tracking downward. When restarting, operating command can be executed without fully stopping of equipment and tracking startup also can be made to save time if there is high-inertia load equipment. Refer to figure 6-3 as detailed.

Refer to P027,P029 and 031P for relevant parameters.

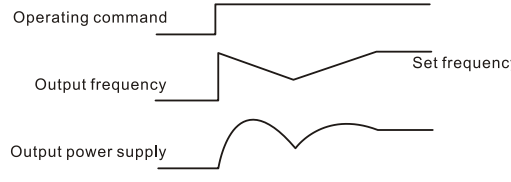

Figure 6-3 Frequency Tracking Startup

[Note] During frequency tracking startup, the frequency set by VFD will make frequency tracking downward and carry out tracking at the maximum speed. During starting, the current may be relatively large and overcurrent or stalling phenomenon may occur. It is necessary to pay attention to the adjustment of tracking current level. F033 is generally set at about 100 and shall be specifically set as per the mechanical inertia.

F026	Setting range	Unit	Ex-factory value	Alteration

Stop mode	0～1	1	0	×

0: For deceleration stop, when F030 is 0, DC braking is invalid. When DC braking is invalid, the VFD will decelerate to stop frequency and stop output, and motor will stop in self-running manner. When F030 is not 0, DC braking is valid, after VFD decelerates to stop frequency, it will stop in DC braking manner. When stopping, DC braking is usually used for high-position stop or positioning control. Note: frequently using DC braking may cause overheat of motor. Relevant parameters are F028, F030 and F031.

1: After free running stop VFD receives stop command, VFD will immediately stop output and motor will stop in free running manner. Under such manner, DC braking is invalid.

F027	Setting range	Unit	Ex-factory value	Alteration
Startup frequency	0.1～30.0 Hz	0.1Hz	0.5	×

Startup frequency refers to initial starting frequency of VFD, for instance, when the startup frequency is set as 5.0 Hz, VFD will run between 5.0Hz to maximum operation frequency after it is started at 5.0Hz.

Relevant parameters: F025, F029 and F031.

F028	Setting range	Unit	Ex-factory value	Alteration
Stop frequency	0.1～30.0 Hz	0.1Hz	0.5	×

When VFD is under deceleration stop and frequency decreases to stop frequency, the VFD will stop output or start DC braking stop.

When F030 is 0, the DC braking when stopping is invalid and VFD will stop output when it decreases to F028. When F030 is set as valid, VFD will stop in DC braking manner when it decreases to F028.

Relevant parameters: F028, F030 and F031.

F029	Setting range	Unit	Ex-factory value	Alteration
DC braking time when	0.0～25.0s	0.1s	0.0	×

This parameter will enter DC braking status when it is set as startup and will be input into duration time of motor DC braking current. When it is set as zero, it means the DC braking is invalid. Refer to Figure 6-4 for details.

DC braking start up is usually used when load can move under fan stop status for motor will be in free running status with uncertain direction before VFD outputs voltage.Therefore, we can execute DC braking before startup and then start the motor to avoid the tripping of motor.

Parameters will be valid when F025 is set as zero. Refer to F028, F029 and F031 for relevant parameters.

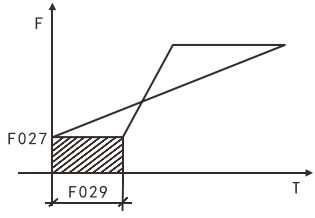

Figure 6-4 DC Braking Time when Starting

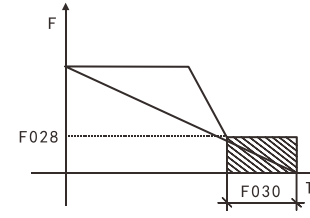

Figure 6-5 DC Braking Time when Stopping

F030	Setting range	Unit	Ex-factory value	Alteration
DC braking time when stopping	0.0～25.0s	0.1s	0.0	×

When this parameter is set as non-zero, the DC braking when stopping is valid and it will enter the motor DC braking time. When stopping, DC braking is usually used for high-position stop or positioning control. When this parameter is zero, DC braking is invalid. Refer to Figure 6-5 for details.

This parameter is valid when F026 is set as zero. Refer to F026, F028 and F031 for related descriptions.

F031	Setting range	Unit	Ex-factory value	Alteration
DC braking level	0.0～20.0%	0.1%	2.0	×

This parameter can be used to set the input motor DC braking voltage when starting and stopping and adjusted to obtain different braking voltages. The parameter must be adjusted from small to large slowly until sufficient braking torque is reached, otherwise the motor will be damaged.

100% voltage shall be used for maximum operation frequency.

F032	Setting range	Unit	Ex-factory value	Alteration
Frequency tracking time	0.1～20.0s	0.1s	5.0	×

In case of external exception or temporary power failure, this parameter will be set as frequency tracking time when VFD is executing frequency tracking.In some large inertia load starting and stopping, restarting after machinery fully stops will waste much time for load inertia is large.After frequency tracking is enabled, the starting can be executed without complete stop of machinery.And VFD will conduct frequency tracking form top to down with set frequency and then continue to accelerate to set frequency after tracking.

F033	Setting	Unit	Ex-factory value	Alteration
Frequency tracking current level	0～200%	1%	150	×

When VFD is executing frequency tracking, output current shall take this set value as level. When output current is larger than this level, the frequency will drop and make current below current level, and then re-execute the frequency tracking.

F034	Setting range	Unit	Ex-factory value	Alteration
Voltage rising time during frequency tracking	0.1～10.0s	0.1s	0.5	○

When startup mode of VFD is set as frequency tracking, there is a voltage rising process. When the voltage rising is too fast, the current will be very large and the tracking process will be fast. If the voltage rising is slow, the current will be small and tracking will also be slow. The general setting mode is that for machinery with small power, F034 shall be set as a small value while for machinery with large power.

F035– F040	reserve

F041	Setting range	Unit	Ex-factory value	Alteration
Carrier frequency	0～15	1	*	×

Carrier frequency is related to electromagnetic noise of motor as well as to VFD's heat productivity and disturbance to environment. Refer to the following table:

Carrier frequency	Electromagnetic noise	Heat productivity	Disturbance to environment
Small ↓ Large	Large ↓ Small	Small ↓ Large	Small ↓ Large

Carrier Mapping Table:

Setting value	0	1	2	3	4	5	6	7	8	9	10	11	12	13	14	15
Carrier frequency KHz	1.25	2	3	4	5	6	7	8	9	10	11	12	13	14	15	16

The higher the carrier frequency is, the smaller the motor's electromagnetic noise will be, but the disturbance to other systems will be stronger and the heat productivity of VFD will be larger. When the ambient temperature is relatively high and the motor load is relatively heavy, we can appropriately reduce the carrier frequency to improve the heat characteristics of VFD.

The ex-factory value of carrier frequency is set as per model.

F042	Setting range	Unit	Ex-factory value	Alteratio
Jog frequency	0.0～1000.0Hz	0.1Hz	5.00	○

This parameter can realize the jog function in machine testing and jog operation only can be realized through 6-way programmable terminals. Jog frequency is limited by maximum operation frequency and lower frequency limit. When the jog function is enabled, other operating command will not be accepted and the acceleration time of jog frequency is determined by acceleration time IV. After the jog button is released, VFD will immediately stop output. When realizing the jog function, please set any one of corresponding 6-way programmable terminals as 07 or 08.

Jog function is only valid under shutdown status but invalid during running.

Refer to F044-F049 for relevant parameters.

F043	Setting range	Unit	Ex-factory value	Alteration
S curve time	0.0～6500.0s	0.1s	0.0	○

This parameter is used to set the soft start or soft stop without impact during start or stop of VFD; when S curve is started, the VFD will make the acceleration/deceleration curves with different speed as per the acceleration/deceleration time. Refer to Figure 6-6 for S curve time description.

When F043 is set as zero, S curve is invalid, i.e it will accelerate and decelerate in a straight line, irrespective of stalling situation, this parameter will be valid when F014 is smaller than F043 provided that the actual acceleration is (F014+F043)/2.

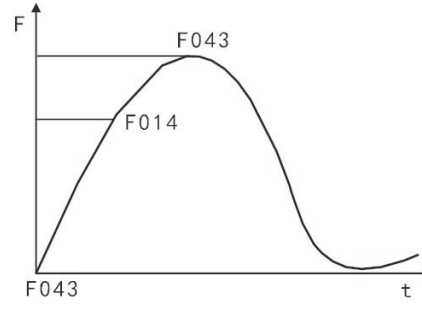

Figure 6-6 S Curve Time

6.3 Functional parameter of input/output terminals

F044	Setting range	Unit	Ex-factory value	Alteration

X1 terminal function	00～32	1	02	×
F045			03	
X2 terminal function				
F046			14	
X3 terminal function				
F047			22	
X4 terminal function				
F048			23	
X5 terminal function				
F049			24	
X6 terminal function				

01: RUN (running, & can form several control mode in combination with other terminals.)

02: FOR (forward rotating)
03: REV (reverse rotating)
04: STOP (stopping)
05: FOR/REV (forward/reverse switching, which may also be enabled through three-wire connection. Refer to the following text for details.)

06: JOG (jog)
07: Jog forward, with related parameters of F020，F021，F042.
08: Jog reverse, with related parameters of F020，F021，F042.
09: External control timer 1 start
10: External control timer 2 start
Upon contact closure, the timer is started to time. When time is over, multi-functional output point will be actuated.

11: Set forced frequency switching as F003.
12: In case radiator or motor is overheating, this contact shall be used for detection to protect motor and VFD.
13: Emergency cut-off may receive external fault signals such as emergency stop.
14: Reset can be used after fault elimination.
15～16: Reserve

17: Acceleration/deceleration time selection I

18: Acceleration/deceleration time selection II

Four selections of acceleration/deceleration time for VFD are given here.

19: Multi-segment speed I

20: Multi-segment speed II

21: Multi-segment speed III (16-segment speed can be set with multi-segment speed I, II, III and IV.)

22: High speed

23: Medium speed

24: Low speed

Combination of high, medium and low speed can enable three running modes with different frequency, wherein high-end signal prevails. Three kinds of speed are respectively determined by frequency II, III and IV.

25: PID is allowed to close; PID function is enabled and is allowed to be only effective during running.

26: Multi-segment speed IV

27: UP function

28: DOWN function

Upon actuation of this terminal, VFD frequency will increase or decrease for one unit. When switch is retained, frequency will uniformly change after rapidly increasing or decreasing to some extent. Altered frequency can be memorized or not based on parameter selection in case of power failure and recover.

29: Draft allowance (Draft actuation is allowed upon triggering of this contact.)

31: Pulse counter (This terminal can receive pulse signals not more than 250Hz and make counting after being set as counter.)

32: Counter reset (Actuation of this contact will make current count value eliminated, with "C00" showed and recounting conducted.)

◆ **Three-wire connection**

Three multi-functional terminals shall be used for three-wire connection to enable switching between forward and reverse rotating, which is widely used for optoelectronic switch and other cases, as shown in Figure 6-7.

（1）Button description

B1: Forward Button (normally open), with effective edge

B2: Reverse Button (normally open), with effective edge

B3: Stop Button (normally closed), with effective edge

（2）Parameter set

F001=1 under external terminal control

F044=02 X1 is set as forward function

F045=03 X2 is set as reverse function

F046=04 X3 is set as stop function

（3）Actuation description

Triggering of X1 enables VFD forward (start)；

Triggering of X2 enables VFD reverse；

Disconnection of normally closed button B3 enables VFD stop.

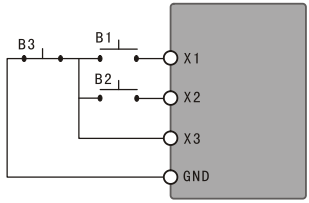

Figure 6-7 Three-wire Wiring Diagram

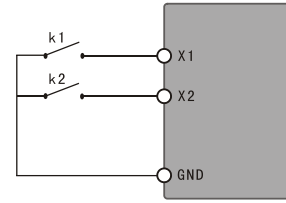

Figure 6-8 Two-wire Wiring Diagram

◆Two-wire connection

Enable start, stop, forward/reverse switching, as shown in Figure 6-8. K1， K2 refer to effective level.

(1) Parameter set: F001=1(external terminal control), F044=01(X1 is set as RUN function), F045=05(X2is set as FOR/REV switching function). Upon closing of K1, VFD runs in a free way. VFD runs in a forward way when K2 is disconnected and in a reversed way when K2 is closed.

(2) Parameter set: F001=1(external terminal control), F044=02(X2 is set as forward function), F045=03(X2 is set as reverse function). Upon closing of K1, VFD runs in a forward way and runs in a reverse way when K2 is closed.

◆ Acceleration/deceleration time selection I & II

X4 terminal	X5 terminal	Result
OFF	OFF	Acceleration/deceleration time I
ON	OFF	Acceleration/deceleration time II
OFF	ON	Acceleration/deceleration time III
ON	ON	Acceleration/deceleration time IV

[Description] 1) This function is enabled when F080 is set as 0, 2 and 3 and disabled upon disturbed and internally controlled multi-segment speed;

2) Four selections of acceleration/deceleration are available with combination of any two

multi-function input terminals;
3) Related multi-function input terminals are set as acceleration/deceleration time selection I and II. Take terminals X4 and X5 for example. If F047 of terminal X4 is set as 17 and F048 of terminal X5 is set as 18, then acceleration/deceleration time selection I and II are enabled for terminals X4 and X5 respectively.

◆ Function of high, medium and low speed terminals

RUN	X6	X5	X4	Result
ON	OFF	OFF	OFF	Main speed, with set value of F003 as the frequency
ON	ON	OFF	OFF	Low speed, with set value of F086 as the frequency
ON	ON/OFF	ON	OFF	Medium speed, with set value of F087 as the
ON	ON/OFF	ON/OFF	ON	High speed, with set value of F088 as the frequency

[Description] 1) This function is only enabled when F080 is set as 2, i.e. externally controlled 4-segment speed is effective;
2) Acceleration/deceleration time is determined through acceleration/deceleration selection terminal;
3) In case of simultaneous signals from high, medium and low speed, priority shall be given as per the sequence of high, medium and low speed.

◆UP and DOWN functions

UP	DOWN	Result
ON	OFF	Frequency up
OFF	ON	Frequency down
ON	ON	Frequency remains the same

[Description] 1) UP and DOWN functions are only enabled when the frequency source is under keyboard operation, i.e. P002 is 0.
2) UP and DOWN functions are effective during running and the frequency cannot be changed during standby.
3) Operating frequency will not rise when it reaches the maximum.
4) Operating frequency will not decrease when it reaches the minimum or lower limit.
5) When UP and DOWN functions are adopted, up and down speed shall be dependent on current acceleration/deceleration time.
6) If UP or DOWN is long pressed, the frequency will rapidly increase or decrease to some extent and then increase or decrease uniformly.
7) The value modified through UP or DOWN through setting of F077 and F117, make sure stop memory or power fault memory function.

◆ Description of counter function

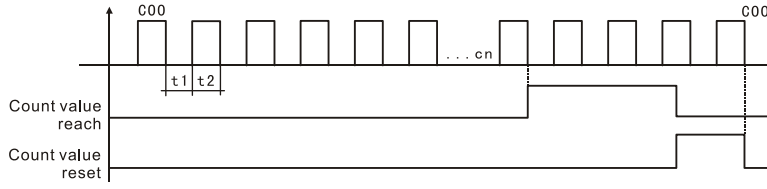

Figure 6-9 Description Diagram of Counter Function

[Description] 1) Trigger signal duration shall not be lower than 2ms (t1, t2≥2ms)
2) Count value reach is corresponding to actuation of multifunctional output contact.
3) Recounting may be conducted only after the counter is reset;
4) The counter will stop counting upon 65535.

F050	Setting range	Unit	Ex-factory value	Alteration
Y1 output function	00～32	1	01	○
F051			05	
Y2 output function				
F052			00	
Output function of terminals KA &				
F053			03	
Output function of terminals FA, FB & FC				

01: Indications during running	Contact is enabled in case of output or running indication from VFD.
02: Zero-speed indication	Contact is enabled if output frequency is less than start-up frequency.
03: Fault indication	Contact is enabled in case VFD is abnormal.
04: DC braking indication	Contact is enabled if VFD is under DC braking condition.
05: Set frequency reaching indication	Contact is enabled if output frequency reaches set frequency.
06: Underway acceleration indication	Contact is enabled if VFD is under accelerating condition.
07: Underway deceleration indication	Contact is enabled if VFD is under decelerating condition.
08: Frequency consistency I arrival indication	Contact is enabled if output frequency reaches designated frequency (F60).
09: Frequency consistency II arrival indication	Contact is enabled if output frequency reaches designated frequency (F61).
10: Motor overload warning indication	Contact is enabled if motor overload is detected by the VFD.

11: Torque rich detection indication	Contact is enabled if torque rich is detected by the VFD.
12: VFD overload warning indication	Contact is enabled if overload is detected by the VFD.
13: Pulse set counter reaching indication	Contact is enabled if count value reaches set value (F065) when external counter is executed.
14: Pulse medium counter reaching indication	Contact is enabled if count value reaches set value (F066) when external counter is executed.
15: External control timer I reaching indication	Contact is enabled if timer I reaches set value.
16: External control timer II reaching indication	Contact is enabled if timer II reaches set value.
17: Low voltage warning indication	Contact is enabled if low voltage is detected by the VFD.
18: Stage completion indication for internally controlled multi-segment speed	Contact is enabled and one pulse is output after each stage is completed under programming operation of the VFD.
19: Process completion indication for internally controlled multi-segment speed	Contact is enabled and one pulse is output after all stages are completed (i.e. after one circle) under programming operation of the VFD.
20: 4-20mA disconnection indication	Contact is enabled if AI input signal is disconnected and F070 is more than 2.
21-24: Reserve	
25: Actuation indication of auxiliary pump 1	Contact controls start-up and stop of the auxiliary pump. Refer to description of multi-pump operation for details.
26: Actuation indication of auxiliary pump 2	
27: Draft completion indication	Contact is enabled when draft is completed and it will automatically reset when the VFD stops.
28: PID lower limit warning indication	Contact is enabled if PID feedback quantity is less than the lower limit (F162).
29: PID upper limit warning indication	Contact is enabled if PID feedback quantity is more than the upper limit (F161).
30: Braking resistor actuation indication	Contact is enabled if the VFD is under operation and DC voltage is higher than braking voltage.
31: Electromagnetic relay actuation indication	Corresponding contact is enabled when contactor pulls in.
32: Fan actuation indication	Corresponding contact is enabled when the VFD temperature rises or the VFD is running.

F054	Setting range	Unit	Ex-factory value	Alteration
A0 output function	0～3	1	0	○

Digit frequency output terminal outputs pulse quantity or 0-10V analog quantity. In combination with F055, it can be used for external monitoring after being connected to

corresponding instruments with range under 10V.

0: 0-10V analog quantity output, corresponding to output frequency, 0-10V corresponding to 0-maximum operation frequency
1: 0-10V analog quantity output, corresponding to output current, 0-10V corresponding to 0-two times of rated current of the VFD
2: Analog quantity output, corresponding to DC bus voltage, 0-10V corresponding to 0-1000V
3: Analog quantity output, corresponding to output AC voltage, 0-10V corresponding to 0-510V/255V

F055	Setting range	Unit	Ex-factory value	Alteration
A0 analogy output	0～100%	1%	100	○

This parameter can be used to adjust output voltage of analog terminal so as to adapt to frequency instrument with different range and to calibrate the instruments. It can also be used for calibration if a revolution meter with a range of 0-5V is connected to display operating frequency through multi-functional terminals, with F055 set as 50.

F056	Setting range	Unit	Ex-factory value	Alteration
Hopping frequency 1	0.0～1000.0 Hz	0.1Hz	0.0	○
F057				
Hopping frequency 2				
F058				
Hopping frequency 3				
F059	0.10～10.00 Hz	0.1Hz	0.5	
Hopping frequency range				

To avoid mechanical resonance point, these three frequency hopping points are set. The actual hopping frequency range is two times that of F059 and all hopping frequency will be invalid when F059=0, as shown in Figure 6-10.

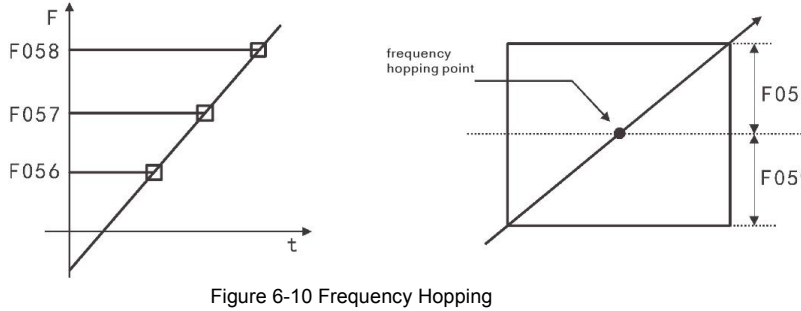

Figure 6-10 Frequency Hopping

F060	Setting range	Unit	Ex-factory value	Alteration
Frequency consistency I (constant pressure water supply high speed frequency)	0.0～1000.0 Hz	0.01 Hz	0.0	○
F061				
Frequency consistency II(constant pressure water supply lower speed frequency))				
F062	0.1～10.0 Hz	0.1 Hz	0.5	
Frequency consistency range				

When output frequency is more than consistent frequency, corresponding multi-functional output terminal is enabled, with consistent frequency range as a hysteresis loop. When the VFD is used for constant-pressure water supply, F060 is used as high-speed frequency and F061 is set as low-speed frequency.

F063	Setting range	Unit	Ex-factory value	Alteration
Time set of external control timer I	0.1～10.0s	0.1s	0.1	×
F064	1～100s	1s	1	×
Time set of external control timer II				

External control timer I is a timer of 0.1S-10.0s and external control timer II is of 1s-100s. When multi-functional input terminal timer opens or closes, the timer starts to time; when the timer reaches, corresponding multi-functional output contact is enabled; when the timer disconnects, multi-functional output terminal timer resets. During operation, the timer will continue timing normally in spite of stop due to fault and will reset automatically in case of stop due to power failure.

F065	Setting range	Unit	Ex-factory value	Alteration
Pulse count value set	0～65500	1	0	○
F066	0～65500	1	0	○
Pulse medium counter set				

6-way multi-function input terminals can be used as trigger terminal of the counter. When count value reaches the set value F065, corresponding multi-function output contact is enabled. After zero clearing, the counter resets to enable recounting. Proximity switch and optoelectronic switch can be used for trigger signal。

F067	Setting range	Unit	Ex-factory value	Alteration
Positive and negative logic of digital input terminal	0～1	1	0	×

0: Positive logic, with NPN as wiring mode 1: Negative logic, with PNP as wiring mode

It shall be used together with Jumper J2. In case of NPN as the external wiring mode, J2 jumps to NPN, with F067 set as 0; in case of PNP as the external wiring mode, J2 jumps to PNP, with F067 set as 1.

F068	Setting range	Unit	Ex-factory value	Alteration
Digital input dithering elimination time	0～60000ms	1	20	○

F069	Setting range	Unit	Ex-factory value	Alteration
Pulse output maximum frequency	1.0～10.0kHz	0.1	10.0	×

6.4 Functional parameter of analog quantity

F070	Setting range	Unit	Ex-factory value	Alteration
Input channel selection for analog quantity	0～11	1	0	×

There are two channels AI1 and AI2 and three modes to be selected for analog quantity input:

The unit : 0: 0～10V 1: 0～5V

decade : 0: 0～20mA / 0～10V 1: 4～20mA/2～10V

[Note] Current or voltage input can be selected by channel 2 through jumper J3

This parameter can be set to satisfy different analog input signals.

F071	Setting range	Unit	Ex-factory value	Alteration
Filtering time of analog quantity	0～1000ms	1	20	×

Setting of this parameter is related to reaction speed of analog quantity; the larger the F071 is set, the slower the analog quantity makes response.

F072	Setting range	Unit	Ex-factory value	Alteration

High-end frequency of analog quantity	0.0～1000.0 Hz	0.1 Hz	50.0	×
F073 Low-end frequency of analog quantity	0.0～1000.0 Hz	0.1 Hz	0.0	×
F074 Bias direction of high-end frequency	0～1	1	0	×
F075 Bias direction of low-end frequency	0～1	1	0	×

0: Positive direction 1: Negative direction

Bias direction refers to forward/reverse command instruction; positive bias represents forward and negative bias symbolizes reverse. Refer to diagram description of F076 for details.

F076	Setting range	Unit	Ex-factory value	Alteration
Reverse selection for negative bias of analog quantity	0～1	1	0	×

0: Reverse unavailable for negative bias 1: Reverse available for negative bias

This parameter can be used to set range and zero point of external analog terminal, thus composing any form of curve to control the motor, as shown in Figure 6-11.

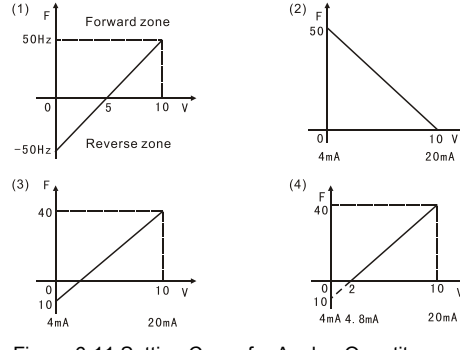

Figure 6-11 Setting Curve for Analog Quantity

(1) Parameters: F073=50 F075=1 F072=50 F074=0 F076=1
[Description] The curve can be used to make easy combination with other systems for various complex applications. When the curve is applied, forward/reverse instruction of external terminals is still effective, meaning the curve will be reversed upon forward/reverse switching.

(2) Parameters: F073=50 F075=0 F072=0 F074=0 F076=0
[Description] The curve is specially applied to negative slope setting, where pressure and temperature are controlled by transducer, with a large quantity of pressure and output signals. Therefore, the curve exactly meets requirements when stop or deceleration is required of corresponding VFD.

(3) Parameters: F073=10 F075=1 F072=40 F074=0 F076=1
[Description] It can be widely and flexibly used by users.

(4) Parameters: F073=10 F075=1 F072=40 F074=0 F076=0
[Description] This curve is an extended one of the above curve. 2V-10V (4.8mA-20mA) is corresponding to 0Hz-40Hz and signals of 0V-2V (4-4.8mA) are invalid. The curve can be used to avoid noise disturbance. Under severe environment, signals under 1V shall not be used as far as possible to set operating frequency of the VFD.

F077	Setting range	Unit	Ex-factory value	Alteration
Memory function selection for UP & DOWN	0～1	1	0	×

0: Not memorized 1: Memorized

This parameter can be used to select whether the value modified through UP and DOWN is memorized or not after stop. When F077 is set as 1, the value upon stop will be memorized after re-start up; if need power off protection, then set F117 to 1 with the value of UP and DOWN at the same time.
Refer to F044-F049 description for details about related parameters.

F078	Setting range	Unit	Ex-factory value	Alteration
Increment selection For UP & DOWN	0～1	1	0	×

0: For 0.01HZ, minimum up/down speed is 0.01HZ
1: For 0.1HZ, minimum up/down speed is 0.1HZ

This parameter can be used to adjust up/down speed unit for UP and DOWN to meet users' need.

F079	Setting range	Unit	Ex-factory value	Alteration
Increment multiple for UP & DOWN	1～250	1	0	×

The actual increment of UP and DOWN refers to the result after values of F078 and F079 are multiplied.

6.5 Functional parameters of multi-segment speed

F080	Setting range	Unit	Ex-factory value	Alteration
Multi-segment speed mode selection	0～5	1	2	×

0: Normal operation

1: Internally controlled 16-segment speed

2: Externally controlled 4 segment speed

3: Externally controlled 16-segment speed

4: Externally controlled 4 segment speed(running command valid automatically)

5: Externally controlled 16-segment speed(running command valid automatically)

1: Internally controlled multi-segment(16-segment speed)

[Description]
1) 16-segment speed is composed by main speed and 15-segment speed;
2) Acceleration/deceleration time of each segment speed is set through F084 and F085;
3) Operating time is set by timers F101-F116 and timers for unused control segments are set as 0;
4) Operating direction of each segment speed is set through F082 and F083;
5) Under operation of internally controlled multi-segment speed, operating time and direction is dependent on the setting of internal parameters, with invalid external time and forward/reverse switching.

2: Externally controlled 4-segment speed (refer to function description for high-speed, medium-speed and low-speed terminals F044-F049)

3: Externally controlled 16-segment speed

Multi-function digital input terminal				Result
Multi-segment speed I	Multi-segment speed II	Multi-segment speed III	Multi-segment speed IV	
OFF	OFF	OFF	OFF	Main frequency

ON	OFF	OFF	OFF	For multi-segment speed II, the frequency is determined by F086
OFF	ON	OFF	OFF	For multi-segment speed III, the frequency is determined by F087
ON	ON	OFF	OFF	For multi-segment speed IV, the frequency is determined by F088
OFF	OFF	ON	OFF	For multi-segment speed V, the frequency is determined by F089
ON	OFF	ON	OFF	For multi-segment speed VI, the frequency is determined by F090
OFF	ON	ON	OFF	For multi-segment speed VII, the frequency is determined by F091
ON	ON	ON	OFF	For multi-segment speed VIII, the frequency is determined by F092
OFF	OFF	OFF	ON	For multi-segment speed IX, the frequency is determined by F093
ON	OFF	OFF	ON	For multi-segment speed X, the frequency is determined by F094
OFF	ON	OFF	ON	For multi-segment speed XI, the frequency is determined by F095
ON	ON	OFF	ON	For multi-segment speed XII, the frequency is determined by F096
OFF	OFF	ON	ON	For multi-segment speed XIII, the frequency is determined by F097
ON	OFF	ON	ON	For multi-segment speed XIV, the frequency is determined by F098
OFF	ON	ON	ON	For multi-segment speed XV, the frequency is determined by F099
ON	ON	ON	ON	For multi-segment speed XVI, the frequency is determined by F100

[Description]

1) When F080 is set as 3, externally controlled multi-segment speed mode is effective;

2) Any four digital input terminals are selected, with their functions set as 19 multi-segment speed I, 20 multi-segment speed II, 21 multi-segment speed III and 26 multi-segment speed IV respectively;

3) Multi-segment speed I, II, III and IV can be used to form 15-segment speed; 16-segment speed will be available when main frequency is involved;

4) Each acceleration/deceleration time and programming operation direction is determined by external terminals

5) Main frequency is set by F002; when F002=0, i.e. main frequency is set by keyboard, main frequency is value of F003.

4: Draft is a special parameter used to realize a constant speed for taking up and paying off of curl cord, i.e. constant linear speed can be realized within certain accuracy, as shown in

Figure 6-12.

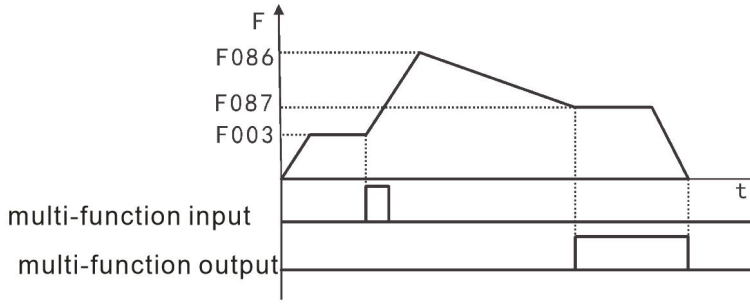

Figure 6-12 Daft Actuation Curve

[Description]
1) Draft will be actuated upon triggering of the external multi-function terminal.
2) During draft actuation, running time T is F101×10.
3) After the completion of draft actuation, the VFD outputs at a constant speed (F087), and corresponding multi-function output contacts are actuated until the stop command is issued, and then, the VFD stops running, and multi-function output contact resets.

5: Disturbance (traverse function) This parameter is specific for the chemical fiber, printing and dyeing; any command input, except stop, external fault, and emergency stop in the running, is not accepted.

[Description] 1) Each frequency of the turning point is determined by F003 and F086;
2) The hopping frequency is determined by F092;
3) The running time is determined by F101 and F102;
4）Related parameters: F003 and F086-F116.

F081	Setting Range	Unit	Ex-factory value	Alteration
Running mode selection of internally controlled multi-segment speed	0～3	1	0	×

0: Program running stops after one cycle
1: Circular running
2: Automatic running (stop interval) stops after one cycle
3: Automatic running (stop interval) in circular running.

This parameter setting is only effective when F080 is set as 1. Refer to F003, F080, and F082-F116 for related parameters.

[Description]

1) Program running stops after one cycle: the VFD runs at the set value of internal parameters after the command of automatic program running is given, and stops automatically after running for one cycle. The VFD can restart after the second running command is given.

2) Circular running: the VFD runs in sequence and circularly at the set value of internal parameters for segment speed frequency and running time; any command input, except stop, external fault, and emergency stop in the circular running, is not accepted.

3) Automatic running (stop interval) stops after one cycle.

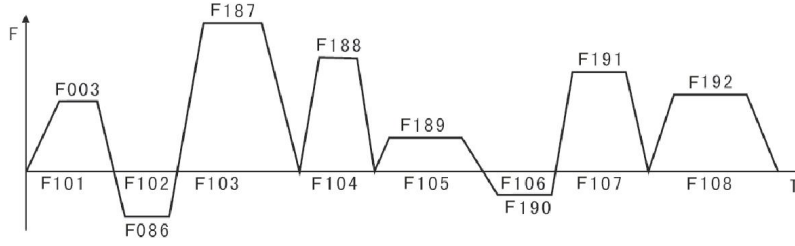

Figure 6-13 Running Curve and Control Parameters for Internally Controlled Multi-segment Speed

[Description] 1) The VFD runs according to parameters after the command of automatic programming running is given, but stop first and then restart in the transformation of each stage; stop automatically after running for one cycle, and the VFD restarts after the second running command is given;

2) The frequency for each segment speed is set by F003, F086 ~ F100;

3) The running time for each segment speed is set by F101 ~ F116;

4) The running direction is set by F082, F083.

F082	Setting Range	Unit	Ex-factory value	Alteration
Speed running direction of first 8 segments	0～255	1	0	×
F083				
Speed running direction of last 8 segments			0	×

F082 parameter set is only effective when F080 is set as 1， The setting mode of running direction for frequency band of F086-F092 and F003 in the programming running is as follows:

The running direction is set by binary 8bit which can be changed into decimal value for the parameter setting. For example, parameter value 01001010 can be changed into decimal

value, i.e., $1\times2^6+1\times2^3+1\times2^1=64+8+2=74$, P082=74. F082=74. F083 is set for the speed running direction of last 8 segments (calculation method is as the same as that for F082)。

F084	Setting Range	Unit	Ex-factory value	Alteration
Acceleration/deceleration time selection for first 8 segments	0～65535	1s	0	×
F085				
Acceleration/deceleration time selection for last 8 segments				×

This parameter set is only effective when F080 is set as 1. The setting methods of acceleration/deceleration time for internally controlled multi-stage speed and segment speed are as follows:

Acceleration/deceleration time is determined by binary 2bit

Bit1	Bit0	加减速时间
0	0	First acceleration/deceleration time F014, F015
0	1	Second acceleration/deceleration time F016, F017
1	0	Third acceleration/deceleration time F018, F019
1	1	Fourth acceleration/deceleration time F020, F021

Acceleration/deceleration time for each segment is determined by binary 16bit

Eighth segment speed		Seventh segment speed		Sixth segment speed		Fifth segment speed		Fourth segment speed		Third segment speed		Second segment speed		First segment speed	
t8		t7		t6		t5		t4		t3		t2		t1	
0	0	0	0	0	0	0	0	0	1	1	0	0	0	1	1

t1 acceleration/deceleration time IV
t2 acceleration/deceleration time I
t3 acceleration/deceleration time III
t4 acceleration/deceleration time II
t5 acceleration/deceleration time I
t6 acceleration/deceleration time I
t7 acceleration/deceleration time I
t8 acceleration/deceleration time I

set value
$1\times2^0+1\times2^1+1\times2^5+1\times2^6=99$
F084 is set as 99
Attached: $2^0=1$ $2^1=2$ $2^2=4$ $2^3=8$
$2^4=16$ $2^5=32$ $2^6=64$ $2^7=128$

F085 is a selection for the acceleration/deceleration time of last 8 segments (calculation

method is the same as that for F084)

F086	Setting Range	Unit	Ex-factory Value	Alteration
Frequency II setting	0.0～1000.0 Hz	0.01 Hz	15	○
F087			20	
Frequency III setting				
F088			25	
Frequency IV setting				
F089			30	
Frequency V setting				
F090			35	
Frequency VI setting				
F091			40	
Frequency VII setting				
F092			0.5	
Frequency VIII setting				
F093			10	
Frequency IX setting				
F094			15	
Frequency X setting				
F095			20	
Frequency XI setting				
F096			25	
Frequency XII setting				
F097			30	
Frequency XIII setting				
F098			35	
Frequency XIV setting				
F099			40	
Frequency XV setting				
F100			45	

Frequency XVI setting				

The parameter can be set, combining multi-function input terminals, with externally controlled 4-segment speed, externally controlled multi-segment speed and internally controlled multi- segment speed selectable. Refer to F080 and F086-F100 description for details about related parameters.

F101	Setting Range	Unit	Ex-factory Value	Alteration
Timer I	0.0～6500.0s	0.1s	10.0	○
F102			10.0	
Timer II				
F103			0.0	
Timer III				
F104			0.0	
Timer IV				
F105			0.0	
Timer V				
F106			0.0	
Timer VI				
F107			0.0	
Timer VII				
F108			0.0	
Timer VIII				
F109			0.0	
Timer IX				
F110			0.0	
Timer X				
F111			0.0	
Timer XI				
F112			0.0	
Timer XII				
F113			0.0	
Timer XIII				
F114			0.0	
Timer XIV				
F115			0.0	

Timer XV				
F116			0.0	
Timer XVI				

The parameter setting is applicable to the running time setting for internally controlled multi-segment speed and draft actuation. Refer to F080 and F101-F116 description for details about related parameters.

F117	Setting Range	Unit	Ex-factory Value	Alteration
Memory function for internally controlled multi-segment speed（UP.DOWN power down reserve）	0～1	1	0	×

0: Not memorized 1: Memorized

This parameter determines the pause function during VFD control at internally controlled multi-segment speed; when F117=1, it can memorize the VFD operating state, and can even memorize during stop or failure, then continue to run after back to normal; when F117=0, memorizing is unavailable.

When use UP and Down function, the parameter and F077 can realize UP and DOWN Timer power down reverse function. When F077=1, UP and DOWN timer memorize during stop. Meanwhile if F177=1, UP and DOWN timer power down reserve.

6.6 Protection function parameters

F118	Setting range	Unit	Ex-factory value	Alteration
Selection of overvoltage stall prevention	0-1	1	1	×

0: Overvoltage stall prevention function is invalid
1: Overvoltage stall prevention function is valid

During VFD deceleration, the motor shall produce rebound energy into VFD under the influence of load inertia to make the voltage on VFD DC side rise; while overvoltage stall function is started and VFD DC voltage is overhigh, the VFD shall stop decelerating till DC side voltage is lower than set value, and for the VFD is decelerating, deceleration time shall automatically prolong.

F119	Setting range	Unit	Ex-factory value	Alteration
Stall level during acceleration	0-200%	1%	150	×

During VFD acceleration, output current of the VFD shall rise rapidly due to overload or excessively short acceleration time, and the VFD shall stop accelerating while exceeding rated set level; when the current is lower than set value, the VFD shall continue accelerating.
[Note] 100% current refers to rated current of the motor, and when the parameter is set to 0,

stall prevention function is invalid during acceleration.

F120	Setting range	Unit	Ex-factory value	Alteration
Stall level during constant speed	0-200%	1%	0	×

During constant running of variable frequency accelerator, the current increases due to fluctuation of load or other reason; when the current exceeds rated set value, the VFD shall decrease output frequency, and if output current returns to normal, the VFD shall reaccelerate up to set frequency.

F121	Setting range	Unit	Ex-factory value	Alteration
Deceleration time for stall prevention during constant speed	0.1-25.5s	0.1s	5.0	○

When the VFD is applied to the load of fans and pumps, P120 can be set as 120%; when the current of VFD is greater than 120%, output frequency shall decrease, consequently the current shall decrease; however, after the current returns to normal, the frequency also shall become normal gradually, thus achieving stall prevention function; decrease rate of the frequency depends on F121.

F122	Setting range	Unit	Ex-factory value	Alteration
Stall level during deceleration	200～800V	1V	Model dependent	×

F123	Setting range	Unit	Ex-factory value	Alteration
Selection of over torque detection method	0-3	1	0	×

0: While achieving the frequency, start to detect over torque; after the detection of over torque, continue operating.
1: While achieving the frequency, start to detect over torque; after the detection of over torque, stop operating.
2: Detect the over torque during running; after the detection of over torque, continue operating.
3: Detect the over torque during operating; after the detection of over torque, stop operating.

F124	Setting range	Unit	Ex-factory value	Alteration
Over torque detection level	0-200%	1%	0	×

When output current goes beyond torque detection level and exceeds half of set time value (ex-factory value 1.0s), over torque detection shall be indicated and corresponding multi-function alarm contact shall be actuated; when it exceeds set time value, the VFD shall provide protection, and when this parameter is set to 0, over torque shall not be detected.

F125	Setting range	Unit	Ex-factory value	Alteration
Over torque detection time	0.1-20.0s	0.1s	1.0	×

When the VFD detects that output current exceeds set motor current, it shall start to calculate over torque time; when over torque time goes beyond half of set detection time value,

corresponding multi-function output terminal shall be actuated with over torque alarm, and the VFD continue operating. In case that over torque time exceeds set detection time value (F125 setting), the VFD shall provide protection, failure information be displayed and the VFD stop outputting.

Refer to F123 and F124 for relevant parameters.

F126	Setting range	Unit	Ex-factory value	Alteration
Counter memory	0-1	0	0	×

0: Not memorized 1: Memorized

Determine whether to memorize counter values after power failure of the VFD via memory function of pulse counter.

F127 – F129	Reserve

6.7 Function parameters of constant-pressure water supply

F130	Setting range	Unit	Ex-factory value	Alteration
Number of auxiliary pumps	0-2	1	0	×

The quantity of auxiliary pumps shall be set via this parameter; start or stop of auxiliary pumps are realized by using multi-function output contact, and auxiliary pump 1 or 2 shall be controlled through peripheral control circuit.

F131	Setting range	Unit	Ex-factory value	Alteration
Continuous operating time of auxiliary pump	1-9000 (min)	1	60	×

When only one of two pumps is in service, for the purpose of making each pump operating in an average manner, when operating time of one pump reaches P131, the other pump shall be switched for operating.

F132	Setting range	Unit	Ex-factory value	Alteration
Interlocking time of auxiliary pump	1-250s	1s	5	○

Setting of this parameter shall determine interlocking time of two auxiliary pumps during mutual switching as shown in Figure 6-14.

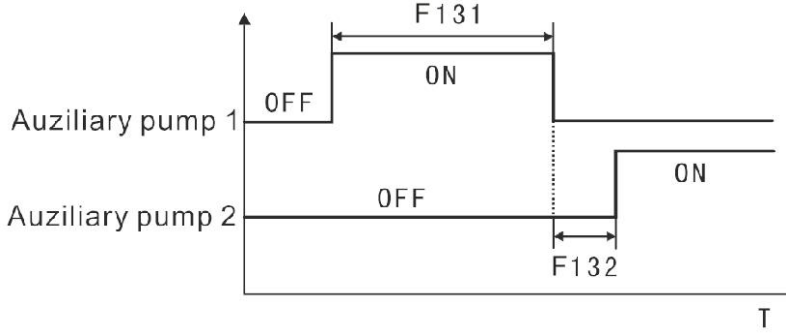

Figure 6-14 Interlocking Time Switching of Auxiliary Pump

F133	Setting range	Unit	Ex-factory value	Alteration
High-speed operating time	1-250s	1s	60	○

In the process of applying constant pressure water supply, main pump operates at fast frequency (as set in F060) due to larger water consumption; when high-speed operating time is achieved, corresponding multi-function contact shall be actuated and auxiliary pumps start to operate. Refer to Figure 6-15 for details.

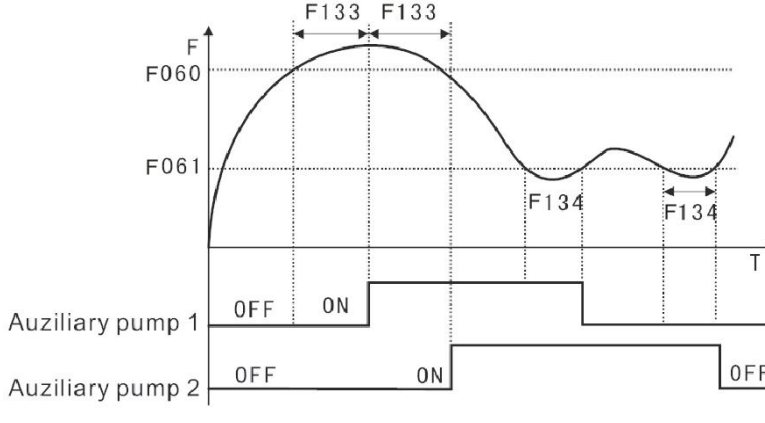

Figure 6-15 High/Low-speed Operating Time Curve of Pump

F134	Setting range	Unit	Ex-factory value	Alteration

Low-speed operating time	1-250s	1s	60	○

During the application of constant pressure water supply, when main pump frequency operates at low speed (set via F061) due to reduction of water consumption and low-speed operating time (F134) is achieved, corresponding multi-function contact shall be actuated and auxiliary pumps stop.

F133 and F134 must be used in coordination with F060, F061 and multi-function output terminal and mainly used for addition and reduction of auxiliary pumps. Refer to Figure 6-15 for details.

F135	Setting range	Unit	Ex-factory value	Alteration
Shutdown pressure level	0-150%	1%	95	○
F136	1-250s	1s	30	○
Shutdown level continuous time				
F137	1-150%	1%	80	○
Wake-up level				
F138	0.00-400.0	0.01Hz	20.00	○
Sleep frequency				
F139	1-250s	1s	20	○
Sleep frequency continuous time				

Shutdown pressure level mainly refers to pressure level occurring when main pump enters the dormancy state; refer to Figure 6-16 for details.

Shutdown level continuous time refers to the duration time on the condition of shutdown pressure level before going sleep; refer to Figure 6-16 for details.

Wake-up level refers to wake-up pressure level from dormancy state to recovery; refer to Figure 6-16 for details.

Sleep frequency refers to the minimum operating frequency while going sleep; refer to Figure 6-16 for details.

Sleep frequency continuous time refers to continuous time of operating under sleep frequency; refer to Figure 6-16 for details.

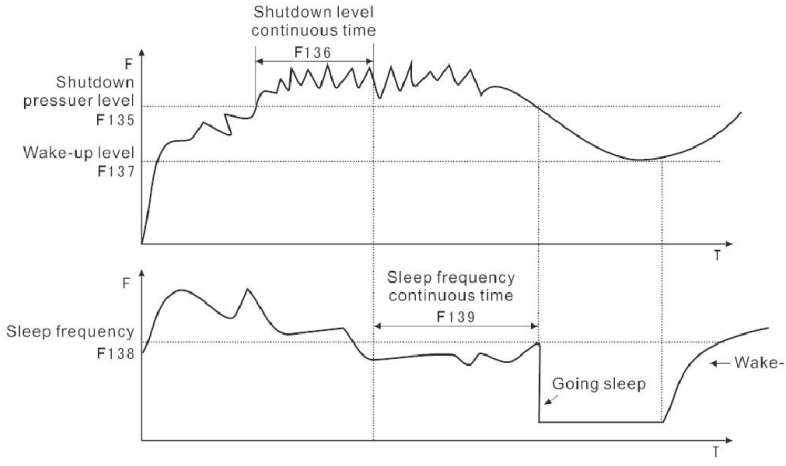

Figure 6-16 Main Pump State Setting and Time Curve

6.8 Motor function parameters

F141	Setting range	Unit	Ex-factory value	Alteration
Rated power of motor		0.01KW	*	×

F141	Setting range	Unit	Ex-factory value	Alteration
Rated voltage of motor		0.1V	*	×

It shall be set as per rated voltage value on motor nameplate; ex-factory value of 230V grade VFD and that of 440V grade VFD are respectively 220 and 380.

F142	Setting range	Unit	Ex-factory value	Alteration
Rated current of motor		0.1A	*	×

This parameter shall be set according to rated value on motor nameplate and can be used for limiting output current of the VFD so as to prevent over current and protect the motor; in case that motor current exceeds this value, AC motor VFD shall provide the protection.

F143	Setting range	Unit	Ex-factory value	Alteration
Number of motor poles	02-22	1	04	×

Number of motor poles shall be determined via this parameter which is set according to motor nameplate.

F144	Setting range	Unit	Ex-factory value	Alteration
Motor rotating speed	0-60000	1r/min	1440	×

It shall be set according to actual speed of the motor; displayed value is identical to this parameter and can be used as the parameter used for monitoring to facilitate the user; this set value is corresponding to the rotating speed at 50Hz.

F145	Setting range	Unit	Ex-factory value	Alteration
Automatic torque compensation	0.0-10.0%	1%	2.0	×

This parameter can be used to make the VFD automatically output extra voltage during running and to compensate the insufficient torque of motor during low frequency. Excessive torque compensation is inadvisable and the setting shall be performed upward gradually based on actual situation. Insufficient compensation shall cause insufficient torque of the motor under low frequency while excessive compensation shall induce excessive torque, thus producing certain impact on machinery and even causing VFD tripping. As shown in the Figure 6-17 on the right.

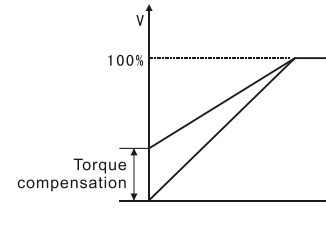

Figure 6-17 Automatic Torque Compensation

F146	Setting range	Unit	Ex-factory value	Alteration
No-load current of motor	0-100%	1%	40	×

The setting of motor no-load current shall affect the quantity of slip compensation and rated current of the motor is 100%.

F147	Setting range	Unit	Ex-factory value	Alteration
Motor slip compensation	0.0～2.0	0.1	1.0	×

When the VFD drives the motor, both the load and the slippage shall increase, and motor running speed shall be closer to synchronous speed via slip compensation and slippage reduction.

F148	Setting range	Unit	Ex-factory value	Alteration
Max.frequency of motor slip compensation	0.0～20.0	0.1Hz	2.0	×

F149	Setting range	Unit	Ex-factory value	Alteration
Slip compensation filtering time	0～2000ms	1ms	20	×

F192	Setting range	Unit	Ex-factory value	Alteration
Motor stator resistance	0.0～99.99	0.01	*	×

F193	Setting range	Unit	Ex-factory value	Alteration
Motor rotor resistance	0.0～99.99	0.01	*	×

F194	Setting range	Unit	Ex-factory value	Alteration
Mutual inductance of motor	0.0～99.99	0.01	*	×

F195	Setting range	Unit	Ex-factory value	Alteration
Leakage of motor	0.0～99.99	0.01	*	×

F150	Setting range	Unit	Ex-factory value	Alteration
AVR function	0-1	1	1	×

0: Invalid 1: Valid

AVR function refers to automatic voltage regulation. On the condition of unstable input power, in case of overhigh voltage, the running of motor under the power supply exceeding rated voltage shall cause temperature rise of the motor, damage the insulation and make output torque unstable; however, automatic voltage regulation can be used to automatically regulate output voltage at rated voltage of the motor.

When this function set is invalid, output voltage shall fluctuate.

F151	Setting range	Unit	Ex-factory value	Alteration
Automatic energy-saving function	0.0-20.0%	0.1%	0.0	×

Automatic energy saving function is invalid while at 0; during acceleration and deceleration, it shall run with full voltage; during constant speed running, the optimum voltage value shall be calculated via load power and supplied to the load to achieving the purpose of energy saving.

F152	Setting range	Unit	Ex-factory value	Alteration
Fault restart time	0.2-25s	0.1s	1.0	○

When the VFD is set in the mode of fault restart, after the duration of VFD fault tripping exceeds the time as set in F152, the VFD shall be restarted. Attention must be paid to the safety during the application of this function.

F153	Setting range	Unit	Ex-factory value	Alteration
Power failure restart selection	0-1	1	0	×

0: Power failure restart is invalid No longer restart after momentary outage

1: Frequency tracking startup Please refer to F025 description

F154	Setting range	Unit	Ex-factory value	Alteration
Allowable outage duration	0.1-5.0s	0.1s	0.5	×

The maximum duration of outage can be determined via this parameter; in case of going beyond set time, the VFD shall still stop outputting after power recovery; restart shall proceed as per general startup sequence.

F155	Setting range	Unit	Ex-factory value	Alteration
Times of fault restart	00-10	1	00	×

The VFD shall be automatically reset and restarted in case of abnormal situation (such as overcurrent and overvoltage); in case of common starting mode, this mode shall be followed; in case of frequency tracking start, the start shall be conducted in the manner of tracking start. After starting, if no anomaly occurs within 60s, set times shall be recovered; if any anomaly occurs and set number is achieved, the converter shall no longer output, and restart shall be conducted after resetting. If F155 is at 0, no automatic reset or restart function shall be performed in case of anomaly.

6.9 PID function parameters

F156	Setting range	Unit	Ex-factory value	Alteration
Proportional constant (P)	0.0-1000.0%	0.1%	100.0	○

Error value gain is set for proportional constant; in case of I=0 and D=0, only proportional control shall be actuated.

F157	Setting range	Unit	Ex-factory value	Alteration
Integration time (I)	0.1-3600.0s	0.1s	5.0	○

Response speed of PID actuation is set via integration time (I); the larger I value is, the slower the response speed is; contrarily, faster response speed and small integration time shall cause the oscillation.

F158	Setting range	Unit	Ex-factory value	Alteration
Derivation time (D)	0.01-10.00s	0.01s	0	○

The attenuation of PID actuation is set via derivation time (D); the larger D value is, the more obvious the attenuation is; D=0 indicate that no effect is produced, that is, invalid.

F159	Setting range	Unit	Ex-factory value	Alteration
Target value	0-100.0%	1%	*	○

Control target value can be set via external voltage signal or panel, and 100% target value is corresponding to the frequency at +10V analog.

PID closed-loop control is generally used for controlling the process with slow change in physical quantity, such as controlling pressure and temperature; generally feedback signal is acquired from temperature transmitter and pressure transmitter; during PID control, feedback signal input channel is analog current signal of 4-20mA.

PID closed-loop control is valid during starting of multi-function input PID. Generally adjustment method of PID control is as follows:
1) Correctly select the VFD, and use the VFD with the input specification in accordance with standard signal of 4-20mA;
2) Correctly set target value;
3) In case of nonoscillatory input, increase proportionality constant P;
4) In case of nonoscillatory input, decrease integration time I;

5) In case of nonoscillatory input, increase the derivation D;
6) Refer to the descriptions in Figure 6-19/6-20 for specific application.
PID control block is shown in Figure 6-18:

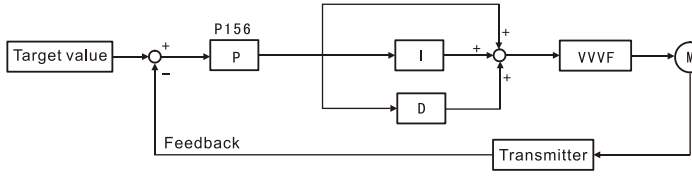

Figure 6-18 PID Control Block Diagram

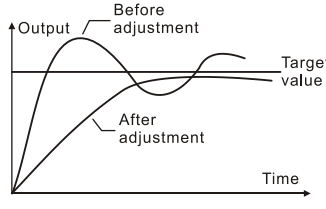

Figure 6-19 Suppress Output Exceeding of PID Control

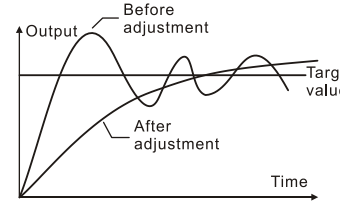

Figure 6-20 Suppress Output Oscillation of PID Control

(1) Suppress output exceeding
a: Decrease derivation time (D value)
b: Extend integration time (I value)

(2) Suppress output oscillation
a: Decrease derivation time (D value) or set it as 0
b: Decrease proportionality constant (P value)

F160	Setting range	Unit	Ex-factory value	Alteration
PID channel setting	0-1	1	10	×

0: PID target value refers to the value set as in F159.
1: PID target value refers to the value of external analog 0-10V (corresponding to 0-100%) and the value set as in F159 is invalid. Target value selection can be set via selection panel and external analog which is 0-10V signal or set through potentiometer.

Unit's digit set PID given channel:

0:F159 given 1: AI1 2: AI2

Ten's digit PID feedback channel

0:AI1 1: AI2

F161	Setting range	Unit	Ex-factory value	Alteration
PID upper limit	0 ~ 100%	1%	100	○

When PID feedback value is greater than set value in P161, corresponding multi-function output terminal shall be actuated and the machine shall not shut down.

F162	Setting range	Unit	Ex-factory value	Alteration
PID lower limit	0 ~ 100%	1%	0	○

When PID feedback value is less than set value in F162, corresponding multi-function output terminal shall be actuated and the machine shall not shut down.

6.10 Communication function parameters

F163	Setting range	Unit	Ex-factory value	Alteration
Communication address	0-250	1	1	×

When RS-485 communication port control is set for the VFD, the position of each VFD shall be set via a parameter.

0: No communication function 01-250: Position of VFD

F164	Setting range	Unit	Ex-factory value	Alteration
Communication transmission speed	0-3	1	2	×

0:4800 bit/s 1:9600 bit/s 2:19200 bit/s 3:38400 bit/s

F165	Setting range	Unit	Ex-factory value	Alteration
Communication data mode	0-5	1	3	×

0: 8N1 For ASCII 1: 8E1 For ASCII 2: 8O1 For ASCII
3: 8N1 For RTU 4: 8E1 For RTU 5: 8O1 For RTU

[Note] 8N1 For ASCII F165=0 or 8N1 For RTU F165=3

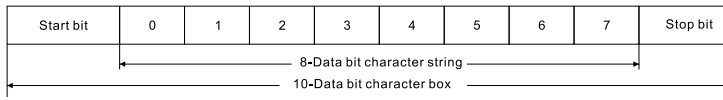

8E1 For ASCII F165=1 or 8E1 For RTU F165=4

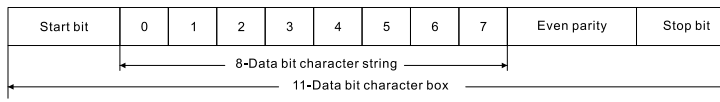

8O1 For ASCII F165=2 or 8O1 For RTU F165=5

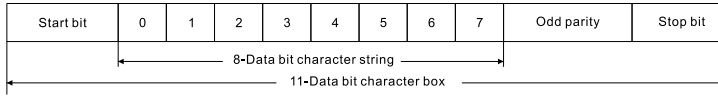

F166-F168	Reserve

F169	Setting range	Unit	Ex-factory value	Alteration
Communication protocol selection	0-1	1	1	×

0: Standard Modbus protocol 1: V70 communication protocol

Standard Modbus Communication Protocol

(1) V70 series converters support RTU mode in standard Modbus protocol.

RTU mode: Each 8bit data is composed of two hexadecimal characters of 4bit, for example: 64H (hex).

	RTU Mode
Start bit	3.5 bits
Slave address	1 bit
Modbus function NO.	1 bit
Data	n bit
CHECK	CRC16（2 bit）
End bit	3.5 bits

VFD parameters communication address indicate hexadecimal system, for example communication address of F100 is 0064H.

Communication specific variables: including communication specific instruction variables and communication specific state variables, address starting from 0200H.

Save of communication variables: rewrite VFD parameters (for example F100) to be stored in EEPROM.Still save after power failure. But parameters cannot be rewritten frequently, otherwise EEPROM memory may be damaged. Rewriting communication-specific variables (variables after 0200H) only modifies values in RAM. Do not save after power failure, it allow rewriting frequently.

Data Types in Communication: because of data is hexadecimal integer, the smallest unit can be seen from the decimal point position of the parameters in the function table. For example, the minimum unit of F003 is 0.1Hz. Therefore, according to Modbus protocol, communication transmission 300 represents 30.0Hz.

Rewritten, of F013 and F172 parameters can only by 06H function, not support by 10H function, and there is no response frame.

Supported Modbus Function

Parameter	Function	Specification
01H	Read parameter address status	Read from 1 to 32
03H	Read holding register	Read from 1 ~ 20. Read all parameters, communication-specific variables
04H	Read input register	Read from 1 ~ 20.
05H	Write single parameter address	Write data FF00H，parameter address ON；write 0000H，parameter address OFF
06H	Write single holding register	All parameters and communication-specific variables can be rewritten
0FH	Write multiple parameter address	Write from 1 ~ 32. parameter address start from 0048H
10H	Write multiple holding registers	Rewritten from 1 ~ 20.All parameters and communication-specific variables can be rewritten

(1) Communication Address table

1) parameter address address table

Modbus mode include: 01H（read parameter address status），05H（write single parameter address），0FH (write multiple parameter address）

parameter address address	Name	R/W	Specification
0000	Operation	R	0–Stop 1–Operating
0001	JOG	R	0–Invalid 1–JOG
0002	Forward/reverse	R	0–Forward 1–Reverse
0003	In operation	R	0–Stop 1–In operation
0004	In jogging	R	0–Invalid 1–In jogging
0005	In forward/reverse rotation	R	0–In forward rotation 1–In reverse rotation
0006	In braking	R	0–Invalid 1–In braking

0007	Frequency tracking	R	0–Invalid 1–Frequency tracking
0008-0047	reserve		
0048	Operation	W	0000—Invalid FF00（or 100， bit8 set 1）—Valid
0049	Forward	W	0000—Invalid FF00—Valid
004A	Reverse	W	0000—Invalid FF00—Valid
004B	Stop	W	0000—Invalid FF00—Valid
004C	Forward/reverse switch	W	0000—Invalid FF00—Valid
004D	JOG	W	0000—Invalid FF00—Valid
004E	JOG Forward	W	0000—Invalid FF00—Valid
004F	JOG Reverse	W	0000—Invalid FF00—Valid

2) Input register address table

All address only read. Modbus function include 04H（read input register）.

Fault Code table:

Address	Name
0000	Output frequency
0001	Set frequency
0002	Output current
0003	Output speed
0004	DC voltage
0005	AC voltage
0006	temperature
0007	Counter
0008	PID target value
0009	PID feedback value
000A	Current fault
000B	Total operating hours

000C	Output power
000D	X terminal state

Decimal	Fault code
64	E.OCS
80	E.oUS
88	E.LuS
92	E.oHS
96	E.oLS
100	E.oAS
104	E.oTS

Note 1: The BIT0-BIT5 in X terminal state corresponds to the X1-X6 terminal , and 1 means terminal is closed.

Note 2: The fault code suffixes S, A, d and n are four consecutive numbers, such as 65 for E.OC.A.

3) Holding register address table

Modbus functions include: 03H (read and hold register), 06H (write a single hold register), 10H (write multiple hold registers)

Definition	Address	Specification
Internal parameters	0000H～00FFH	VFD parameter address，F000～F255
Communication Specific Instruction Variable	0200H	Main control bit，BIT0-BIT7 mapping parameter address 0048H～004FH ，BIT8 virtual input terminal enable
	0201H	Given frequency ， given frequency address when F002=2
	0202H	Virtual input terminal1，BIT0-BIT15 corresponding digital input terminal function 01-16. Digital input terminal function 1-8 already exists in the main control bit, the modification here is invalid.
	0203H	Virtual input terminal 2, BIT0-BIT15 corresponding digital input terminal function 17-32
	0204H	EDO ， Communication control digital output terminal, BIT3 corresponding (FA, FB, FC) relay terminal
	0205H	EAO，Communication control analog output terminal AO
	0206H～020FH	Reverse
Communication-specific state variables, read-only	0210H	Main control bit ， BIT0 ～ BIT15 mapping parameter address 0000H～000FH
	0211H	Digital terminal status，BIT0-BIT5 corresponding X1-X6 , BIT11 corresponding (FA, FB, FC) relay
	0212H	Virtual Output State 1, BIT0-BIT15 corresponding to Digital Output Terminal Function 01～16.
	0213H	Virtual output state 2, BIT0-BIT15 corresponds to digital output terminal function 17-32.
	0214H-021FH	Reverse

	0220H～022DH	Mapping input registers (addresses 0000H-000DH)
	022EH	AI1. Analog input value 1（0～100.00%）
	022FH	AI2. Analog input value 2（0～100.00%）
	0230H	PFI. Pulse input value
	0231H～023FH	Reverse

(1) **For example**

1. Setting No.01 VFD given frequency is 300.0Hz, Application Function Code 06H. Given frequency is communication port（F002=2）.

Master command message:

	RTU Mode
START	
Slave address	01H
Modbus function NO.	06H
High bit of register address	02H
Low bit of register address	01H
High bit of written data	0BH
Low bit of written data	B8H
Check	DEH（CRC low bit）
	F0H（CRC high bit）
END	3.5 bit

Slave response : frequency is set to 300.0Hz, returns the same data as the master requests.

Note 1: When F002 = 2, use 06H or 10H function to rewrite frequency, address is 0201H, EEPROM is not operated at this time.

If the rewriting frequency is to be written to EEPROM, the F003 value needs to be rewritten.

Note 2: Calculations of check bits

RTU mode adopts CRC method. The C language code of CRC16 is as follows:

```
unsigned char data          // Indicators of information buffer
unsigned char length     //Number of bytes in the information buffer
unsigned int crc_chk(unsigned char data,unsigned char length)
{
    int j;
    unsigned int reg_crc=0xffff;
    while(length--){
        reg_crc^=*data++;
        for(j=0;j<8;j++){
```

```
                if(reg_crc&0x01)
                reg_crc=(reg_crc>>1)^0xa001;
                else
                reg_crc=reg_crc>>1;
            }
        }
        return reg_crc;
    }
```

2. Make No. 01 VFD run, function code 05H or 06H. Requirement control mode is communication port（F001=2）.
   0FH and 10H can also achieve this function as multi-write modes. See the following examples for their formats.
   Master command message:

	Write parameter address	Write hold register
Slave address	01H	01H
Modbus function number	05H	06H
High bit of parameter address/register address	00H	02H
Low bit of parameter address/register address	48H	00H
High bit of write data	FFH	00H
Low bit of write data	00H	01H
CRC	——	——

Slave response: VFD is forward operation and returns the same data as the master requests.

3. Read 01 slave running status, function code 01H or 03H.
   Master command message:

	Read parameter address	Read hold register
Slave address	01H	01H
Modbus function number	01H	03H
High bit of parameter address/register start address	00H	02H
Low bit of parameter address/register	00H	10H

start address		
Read parameter address/register quantity(high bit)	00H	00H
Read parameter address/register quantity(low bit)	08H	01H
CRC	——	——

Slave response: 09H to 00001001B， comparing with the parameter address table, it indicates that VFD on command and operating.

	Read parameter address	Read hold register
Slave address	01H	01H
Modbus function number	01H	03H
Byte number	01H	02H
Read data	09H	00H
		09H
CRC	——	——

4. Read the operating frequency and setting frequency of No. 01 VFD, function code 04H or 03H.

Master command message:

	Read input register	Read hold register
Slave address	01H	01H
Modbus function number	04H	03H
High bit of input/hold register start address	00H	02H
Low bit of input/hold register start address	00H	20H
Read byte number(high bit)	00H	00H
Read byte number(low bit)	02H	02H
CRC	——	——

Slave response: The return content indicates that the current frequency of VFD is 0.0Hz and the set frequency is 50.0Hz.

	Read input	Read hold register

	register	
Slave address	01H	01H
Modbus function number	04H	03H
Return byte number	04H	04H
High bit of first register content	00H	00H
Low bit of first register content	00H	00H
High bit of second register content	01H	01H
Low bit of second register content	F4H	F4H
CRC	——	——

5. Write 20.0s for F014, 15.0s for F015 and 10H for function code.
   Master command message:

Slave address	01H
Modbus function number	10H
Start address (high bit)	00H
Start address (low bit)	0EH
Register number(high bit)	00H
Register number(low bit)	02H
Byte number	04H
High bit of first number	00H
Low bit of first register content	C8H
High bit of second register content	00H
High bit of second register content	96H
CRC	— —

Slave response:

Slave address	01H
Modbus function number	10H
Start address (high bit)	00H
Start address (low bit)	0EH
Register number(high bit)	00H
Register number(low bit)	02H

CRC	——

Abnormal response frame: When the slave station cannot complete the request sent by the master station, the abnormal response frame is returned. The frame format is as follows:

1 bit
1 bit（Modbus function number+80H）
1bit: 01: Modbus function number that cannot be processed 02: Unreasonable data address 03: Out-of-range data values 04: Operation failure (write read-only parameters, change parameters that cannot be changed during operation, etc.)
——

6.11 Monitoring function parameters

F170	Setting range	Unit	Ex-factory value	Alteration
Selection of displayed content 1	0-11	1	4	○

F171	Setting range	Unit	Ex-factory value	Alteration
Selection of displayed content 2	0-11	1	5	○

This parameter is set to select PID feedback value and other contents to display, thus in favor of monitoring by the user, and the contents is displayed one by one through switching key; in respect of displayed contents, upon shipping out of factory, operating frequency, set frequency, current and AC voltage are defaulted to be displayed, and if other contents are required be monitored; P170 and P171 can be set for the purpose as below:

0: no display	1: PID feedback value	2: running speed	3: PID target value
4: DC voltage	5: heat sink temperature	6: Counter value	7: output torque
8: Input terminal status	9: AI1	10: AI2	11: PFI

F172	Setting range	Unit	Ex-factory value	Alteration
Fault clearing	00-10	1	0	△

01 refers to fault clearing function and the others are reserved items in factory.

F173	Setting range	Unit	Ex-factory value	Alteration
Rated voltage of VFD	*	1	*	△

It is the value set in factory according to the model and read-only parameter; alteration is inapplicable.

F174	Setting range	Unit	Ex-factory value	Alteration
Rated current of VFD	*	1	*	△

It is the value set in factory according to the model and read-only parameter; alteration is inapplicable.

F175	Setting range	Unit	Ex-factory value	Alteration
VFD type	0-1	1		△

0: Constant torque 1: Fans

Read-only parameter, alteration inapplicable.

F176	Setting range	Unit	Ex-factory value	Alteration
Standard for VFD frequency	0-1	1	0	△

0:50Hz 1:60Hz

The value set in factory, read-only parameter, monitoring applicable and alteration inapplicable.

F177	Setting range	Unit	Ex-factory value	Alteration
Unexpected error 1			*	△
F178				
Unexpected error 2				
F179				
Unexpected error 3				
F180				
Unexpected error 4				

Check fault display via access to this parameter; no fault record, display ——.

F181	Setting range	Unit	Ex-factory value	Alteration
Software version No.	0～10.00	0.01	-	△

Check software version No. via 01 setting.

F182	Setting range	Unit	Ex-factory value	Alteration
Running time	0～3600	1s	-	△
F183	Setting range	Unit	Ex-factory value	Alteration
Cumulative running time	0～65535	1h	-	△

Cumulative running time of VFD

F184	Setting range	Unit	Ex-factory value	Alteration
Speed display coefficient	0.000～9.999	0.001	1.000	△

When F170 or F171 select 2 (running speed), the value displayed on the keyboard = actual running speed × F184.

F185	Setting range	Unit	Ex-factory value	Alteration
Start up preset display selection	00～10	1	0	△

F185 means start display volume of VFD after power-on.

F184～F250	Reserve

NO.7 Maintenance and Fault Information

Regular maintenance and inspection during the application shall make your VFD in normal condition for long period.

7.1 Maintenance and inspection cautions

1 Be sure to first cut off power supply of VFD (L1. L2. L3.L.N) during maintenance and inspection.
2 Be sure cut off power supply of the VFD and make the display disappear; conduct maintenance and inspection till high-voltage indicator is off.
3 Never pull up or mismatch internal power supply, wires and cables during the inspection; otherwise the VFD shall not operate or be damaged.
4 During installation, do not leave the screws and other fittings inside the VFD so as to avoiding short circuit of circuit board.
5 After the installation, keep the VFD clean and prevent the dust, oil mist or moisture invading.

7.2 Regular inspection items

1 Confirm the voltage meets the demand of VFD;
(In particular, pay special attention to the damage of power line and motor)
2 Whether the terminal and connector are loose;
(Whether power line and terminal connecting line suffer from strand breakage)
3 Whether there is dust, scrap iron and corrosive liquids inside the VFD;
4 Prohibit measuring insulation impedance of the VFD;
5 Measure output voltage, output current and output frequency of the VFD;
(avoid big difference in measurement results)
6 Inspect whether the ambient temperature is around -5℃-40℃ and installation environment has good ventilation;
7 Keep the humidity below 90% (without condensing into water droplet);
8 Whether there is abnormal sound or abnormal vibration during the running (avoid placing the VFD in the place with severe vibration);
9 Please regularly clean venthole.

7.3 Fault information and fault clearing

VFDs of V70 feature more perfect protection function in terms of overload, interphase short circuit, earthing short circuit, undervoltage, overheating and overcurrent, etc. In case of occurrence of VFD protection, ascertain the cause as per the information shown below. After handling, perform the running operation newly; if incapable of handling, please contact local dealer.

Fault display	Fault content and description	Handling method
E.oc (E.oc)	Overcurrent during running	1: Inspect whether the motor is in short circuit/ partial short circuit and the insulation of output line is in good condition 2: Inspect whether the motor is locked and mechanical

		load changes abruptly 3: Extend acceleration time or deceleration time 4: Reducing torque boost value 5: Whether network voltage changes abruptly 6: DC braking amount is too large, so reduce it 7: Unreasonable VFD configuration, increase the capacity of VFD
E.ou (E.ou)	Overvoltage during running	1: Extend deceleration time or install brake resistor 2: Whether network voltage changes abruptly
E.Lu (E.Lu)	Variable frequency low voltage	1: Inspect network voltage 2: Send for repair
E.oH (E.oH)	VFD overheating	1: Inspect whether the fan is locked and radiating fin is free of foreign matter 2: Whether ambient temperature is normal 3: Whether there is air space enough for air convection 4: Inspect whether the thermistor and connecting line are in open circuit
E.FoP (E.FoP)	VFD power tube protection	1: Inspect whether the motor is in short circuit/ partial short circuit 2: Inspect whether insulation of output line is in good condition 3: Send for repair
E.GFF （E.GFF）	Short circuit to ground	1: Inspect whether the motor is in short circuit 2: Inspect whether insulation of output line is in good condition 3: Send for repair
E.oLd (E.oLd)	VFD overloading 150% For 1min	1: Inspect whether the capacity of VFD is too small; if yes, increase the capacity 2: Inspect whether mechanical load is locked 3: Poor V/F curve setting, so reset
E.oLL (E.oLL)	Motor overloading 150% For 1min	1: Whether mechanical load changes abruptly 2: Too small motor adapted 3: Heating insulation of the motor becomes poor 4: Whether the voltage fluctuates greatly 5: Whether open-phase exists 6: Mechanical load increases
E.PLo (E.PLo)	Output phase lost	1: whether the three-phase stator windings of the motor phase lost 2: Inspect output cable

E.PL 1 (E.PL1)	Input phase lost	1: whether power supply input phase lost
E.HHC (E.HHC)	Abnormal internal communication of VFD	Send for repair
Er	Wrong parameter setting	Correct parameter setting

Code table:

A	b	C,c	d	E	F	G	H	O,o	S	n	L	T	P	r	u	2
A	b	C	d	E	F	G	H	O	S	n	L	T	P	r	u	2

7.4 Fault and analysis

1. Motor fails to run after operating key is pressed

(1) Operating mode is set in error, that is, the operating mode is enabled together with external control terminal on the condition of external control terminal.
(2) Frequency instruction is low level or not given.
(3) Peripheral wiring is in error, such as wrong two-wire system and three-wire system wiring and relevant parameters setting.
(4) Setting of multi-function input terminal is in error (on the condition of external control).
(5) The VFD is in fault protection condition.
(6) Fault of motor or VFD.

2. Parameter setting failure

(1) Password is locked; conduct setting after decoding.
(2) The VFD is operating.
(3) Abnormal connection of connector assemblies and abnormal communication of digital actuator; remove the actuator and reinstall after cutting off power supply.

3. Motor fails to reversely rotate

Reverse is prohibited.

4. Motor rotates in opposite direction

Motor output connecting line is wrong, it is only necessary to exchange any two connecting lines among U, V and W.

5. Motor decelerates too slowly

(1) Too long deceleration time set, reduce deceleration time.
(2) Install brake resistor.
(3) Install DC brake.

6. Motor overheating

(1) The load is too large and actual torque has exceeds rated torque of the motor, so it is proposed to increase the capacity of motor.
(2) Ambient temperature is overhigh; the motor may be burn out in the environment with high temperature, so it is necessary to reduce ambient temperature of the motor.
(3) Interphase withstand voltage of the motor is insufficient, on/off action of the VFD shall produce impulse wave among winding coils of the motor; generally the maximum impulse voltage shall be 3 times input power of the VFD, and the motor with interphase impulse withstand voltage higher than the maximum impulse voltage shall be used.

7. Starting of VFD interferes in other control devices

(1) Reduce carrier frequency and the times of internal on/off action.
(2) Set up noise filter respectively on power input side and output side of the VFD.
(3) Please properly earth the VFD and motor.
(4) Encase the cable with metal tube for shielding.
(5) Separately route main circuit wiring and control line.

8. Overcurrent stall of VFD is detected during starting of fan

(1) When the start is performed, the fan is in idling condition, so DC braking during starting is required to be set.
(2) DC braking during starting has been set, and it is required to increase DC braking value.

9. Vibration or roaring of the machine

(1) For resonance of vibration frequency of mechanical system and carrier wave, adjust carrier wave to avoid resonance point.
(2) Resonance of vibration frequency of mechanical system and VFD output frequency.
a. Set skipping function to avoid the resonance point;
b. Set rubber vibration insulator on bottom board of the motor.

7.5 Common anomalies and countermeasures

Analysis, judgment and countermeasures of common anomalies are shown in the table below:

Anomaly		Possible causes and countermeasures
Motor fails	No keyboard display	Inspect whether power failure occurs, input power is in open-phase and input power is connected in error.

to run	No keyboard display while charging indicator inside is on	Test the connecting wire and socket relating to keyboard are in good condition. Measure the voltage of each control power supply inside to confirm whether switching power supply is in normal operation. In case of abnormal operation of switching power supply, inspect the socket of switching power incoming line (DC+, DC-) is well connected, start-oscillation resistor is damaged or voltage regulator tube is normal.
	No voltage or low voltage of DC+ and DC- terminals	Inspect charging circuit.
	Buzzing of motor	Too big load of motor, try to reduce it.
	Anomaly not found	Confirm whether it is in tripping state or reset is not performed after tripping, whether it is in restarting state after power failure, whether the keyboard is reset, whether program operating state, operating state of multi-segment speed, set operating state or non-operating state is accessed; try restoring ex-factory value to confirm whether operating instruction is provided and inspect whether running frequency is set to 0.
Unfavorable acceleration/deceleration of motor		Improper setting of acceleration/deceleration time. Too low current limit is set. Overvoltage protection during deceleration. Improper setting of carrier frequency, overloading or oscillation.
Overhigh or overlow motor speed		Improper selection of V/F characteristic. Improper selection of reference for V/F characteristic and resetting shall be performed. Substandard or non-standard rated voltage of the motor. Low voltage of power supply. Wrong setting of frequency signal gain. Wrong setting of output frequency.

No.8 Selection and Configuration of Peripheral Facilities

8.1 Options

Name	Function
Breaker and leakage switch for connection	Protect the connection of VFD, be sure to set breaker on power side, and please use the leakage switch with higher harmonic prevention
Electromagnetic contactor	Set electromagnetic contactor to prevent burning out brake resistor and connect surge absorber while applying.
Surge absorber	Absorb switching surge current of electromagnetic contactor and relay for controlling
Isolation transformer	Isolate input and output effects of the VFD and produce effect on reducing the interference
DC reactor	Improve input power factor of the VFD
AC reactor	Improve input power factor of the VFD and prevent surge voltage impact
Brake resistor and brake unit	Consume recovered energy of the motor and shorten deceleration time

1. Leakage switch

The inside of VFD, inside of motor and input and output leads have earth electrostatic capacitance and the VFD has relatively high carrier frequency, so large earth leakage current is induced to the VFD, which is more obvious for high-capacity machines; the application of leakage switch may cause misoperation of protection circuit, so the attention should be paid to the selection of leakage switch during the application, simultaneously carrier frequency shall be reduced and the lead shortened appropriately.

2. AC reactor

AC reactor can be used for suppressing higher harmonic of VFD input current, improving input power factor of the VFD and preventing leakage-induced impact. It is suggested to use input AC reactor under following circumstances:
1) Unbalanced three-phase power;
2) The same power supply is connected with thyristor or switch-controlled power factor compensating device;

8.2 Configuration

1. AC reactor configuration

Model	Matched power (W)	Rated current (A)	Inductance (mH)

110V	0.75	2.0	
	1.5	2.8	
	2.2	4.4	
220V	1.5	7	
	2.2	11	
	3.7	17	
380V	1.5	4	
	2.2	5	
	3.7	8.5	
	7.5	17.5	

Line reactor, through which alternating current flows, is also called commutation reactor and applied to network incoming line and it is used for suppressing VFD harmonic and feedbacking to the network.

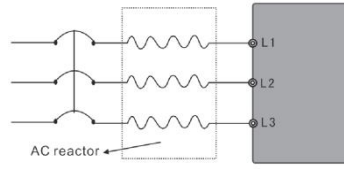

Figure 8-1 AC Reactor

2. Brake resistor configuration

Model of VFD	Specification of brake resistor		Brake torque 10%ED	Dedicated motor KW
	W	Ω		
V70-0.75S1			125	0.75
V70-1.5S1			125	1.5
V70-2.2S1			125	2.2
V70-1.5S2	300	100	125	1.5
V70-2.2S2	300	70	125	2.2
V70-3.7S2	390	40	125	3.7

V70-1.5T4	300	400	125	1.5
V70-2.2T4	300	250	125	2.2
V70-3.7T4	400	150	125	3.7
V70-7.5T4	1000	75	125	7.5

[Note] 1) Please select resistance value and service power set by our company;

2) Our company shall assume no responsibility for the damage of VFD or other devices induced by the application of brake resistor and brake unit which are not provided by our company;

3) Be sure to take the safety and inflammability of the environment for installation of brake resistor and make the distance between it and VFD up to 100mm at least;

4) For changing resistance and power number, please contact local dealer;

5) In need of brake resistor, separately order brake resistor, and contact local dealer for details;

6) It is necessary to install brake unit if quick braking is required of the VFD over 11KW.

Annex

Annex I Examples of Simple Application

1. Forward/reverse rotation of motor in the control of potentiometer

As shown in the curve of Figure F-3.

Parameter setting	F001=1	F002=1	F072=50	F073=50
	F074=0	F075=1	F076=1	

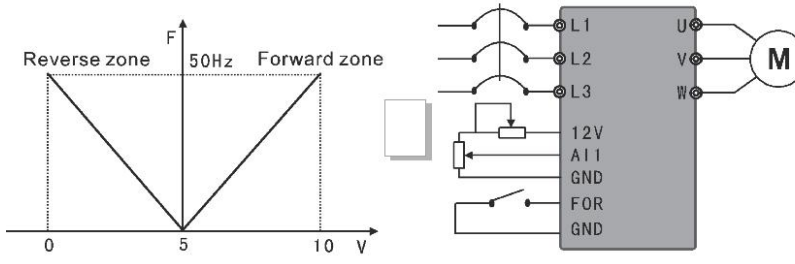

Figure F-3 Motor Forward/Reverse Curve and Wiring Diagram

2. Internally controlled 8-segment speed operation

Realize those shown in the curve of Figure F-4 and stop internally controlled 8-segment speed after operating by one cycle.

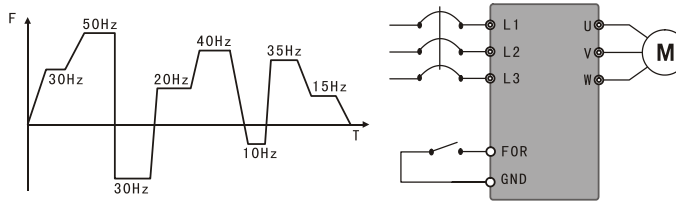

Figure F-4 Operation Curve and Wiring Diagram of Internally Controlled 8-segment Speed

Parameter setting	F080=1	F003=30	F086=50	F087=30	F088=20
	F089=40	F090=10	F091=35	F092=15	F082=36
	F081=0	F014=5	F015=5	F001=1	F083=0

F044=1 F101-F108=15

[Description] 1) Operating time of each segment speed is set via F101-F108=15;

2) Automatic cycle F081=1;

3) After giving operating instruction, stop after operating by one cycle as per set curve.

3. Simple constant-pressure water supply

(1) Use pressure transmitter with the range of 0-10kg and feedback of 4-20mA; pressure water supply of 5kg as required, alarm while above upper limit of 6kg and below lower limit of 4kg, and stop starting external terminal. As shown in Figure F-5.

Parameter setting F001=1 F002=0 F046（X3 terminal function）=25 F052=28

F053=29 F070=10 F156=* F157=* F158=*

F159=50 F160=0 F161=60 F162=40

[Note] F156, F157 and F158 shall be set based on actual situations, and in general, constant-pressure water supply F156=80-100, F157=2.5- ~ 3 and F158=0.

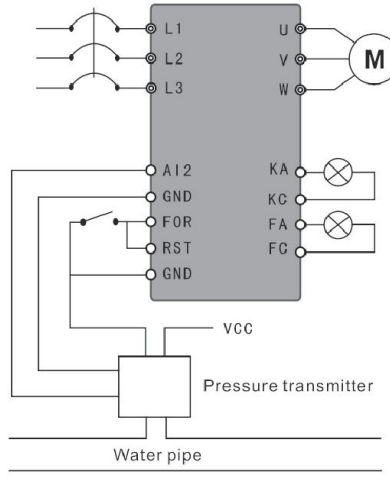

Figure F-5 Constant-Pressure Water Supply – Pressure Transmitter

(2) Use remote pressure gauge of 0-10kg; as required, use external terminal to control the operation and stop and set target value via potentiometer. As shown in Figure F-6.

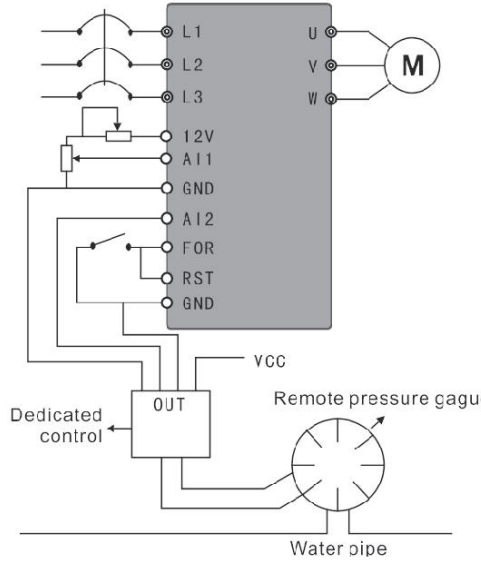

Figure F-6 Constant-pressure Water Supply – Remote Pressure Gauge

Parameter setting	F001=1	F002=0	F046=25	F070=3
	F156=*	F157=*	F158=*	F160=1

[Note]

1) Target value of V70 series VFD can be selected through two methods, one referring setting via panel and the other one referring to 0-10V analog ;

2) Feedback signal is 4-20mA and the others are invalid;

3) Target value in the case is set via potentiometer (0-10V);

4) F156, F157 and F158 shall be set based on concrete conditions (refer to parameter description for details);

5) PID special control board is designed as common remote pressure gauge and input internal resistance is converted into standard signal as per 0-400Ω; in case that the resistance of remote pressure gauge used by the user exceeds prescribed limit, remote pressure gauge shall be replaced or the previous resistor shall be connected in parallel for calibration;

6) When target value is set via potentiometer, F002 still must be set to 0; otherwise, PID shall be ineffective.

Annex II External and Installation Dimensions

1. External dimension of F0 shell

Name	V70-0.75S1 V70-1.5S1 V70-2.2S1 V70-1.5S2 V70-2.2S2 V70-1.5T4 V70-2.2T4
External & installation dimensions	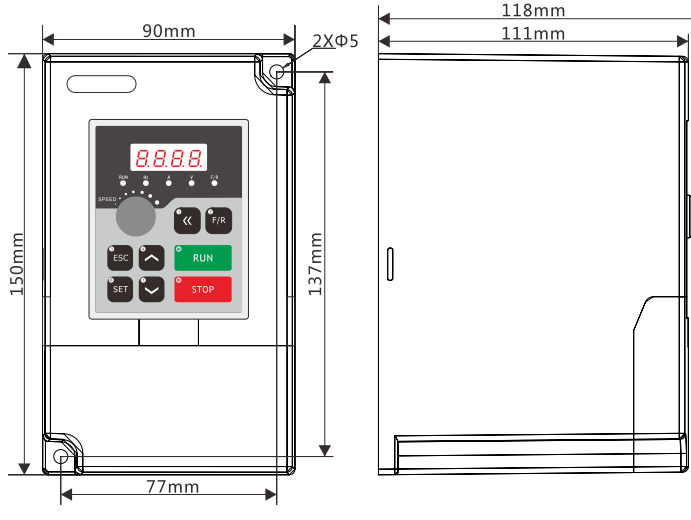

2. External dimension of F1 shell

Name	V70-3.7S2 V70-3.7T4 V70-7.5T4
External & installation dimensions	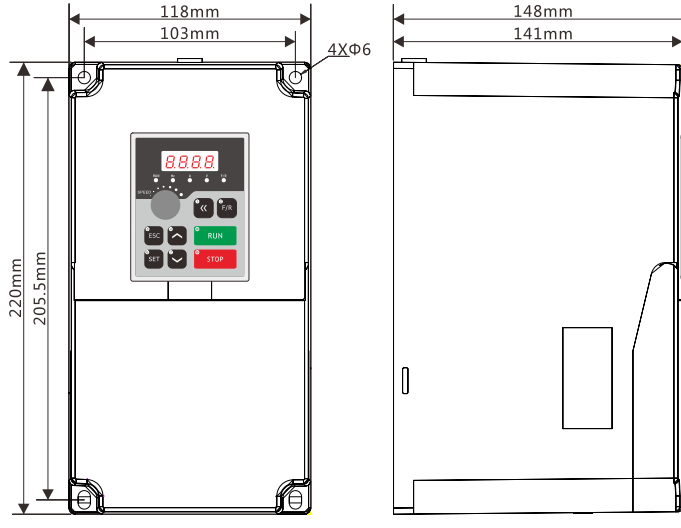

3. Installation dimension of keyboard

The keyboard can be removed from the VFD and installed on the cabinet connect by extension cable.

◆ Direct Installation Method

① Open holes on the cabinet as shown below；

② Remove the keyboard from the VFD to cabinet

③ one end of the extension cable into the keyboard , and the other end into the socket of the VFD keyboard.

Contact Us:
E-mail Address:
Oyostepper.com@gmail.com
Telephone Number: +86-023-68438829
Our website:https://www.oyostepper.com/